PRONE LEG CURL (S-EP-PLC)

ELITE PLUS

INSTALLATION MANUAL

www.muscledfit.com

PRONE LEG CURL (S-EP-PLC)
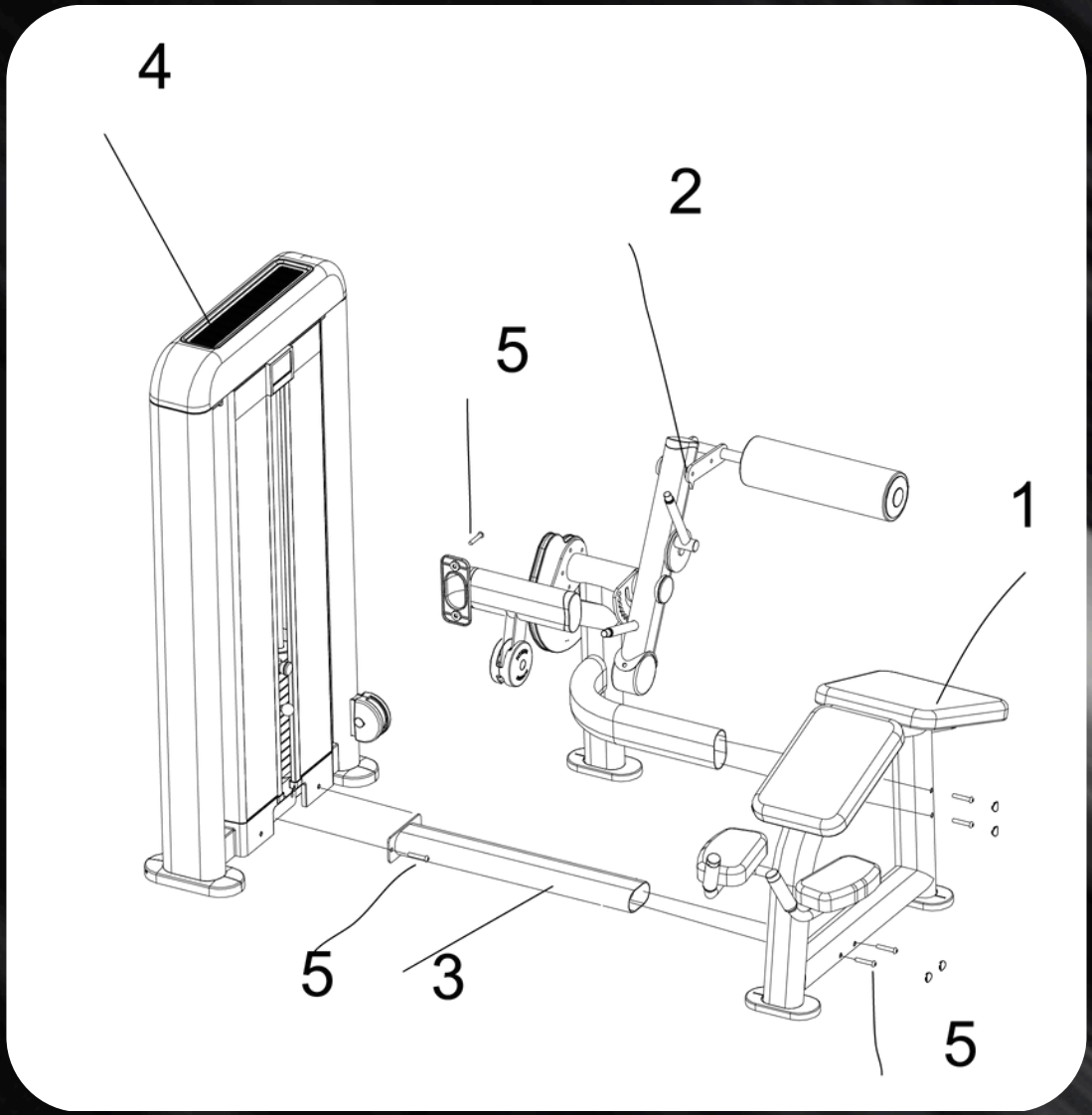
No.	Name	Unit	Qty.
1	main frame component	pcs	1
2	stand component	pcs	1
3	bottom connector assembly	pcs	1
4	weight stack frame welded component	pcs	1
5	M10 x 40 Hex Screw + Flat Washer	pcs	8