# CHEST PRESS (S-EP-CP)

# ELITE PLUS

## INSTALLATION MANUAL

www.muscledfit.com

# CHEST PRESS (S-EP-CP)
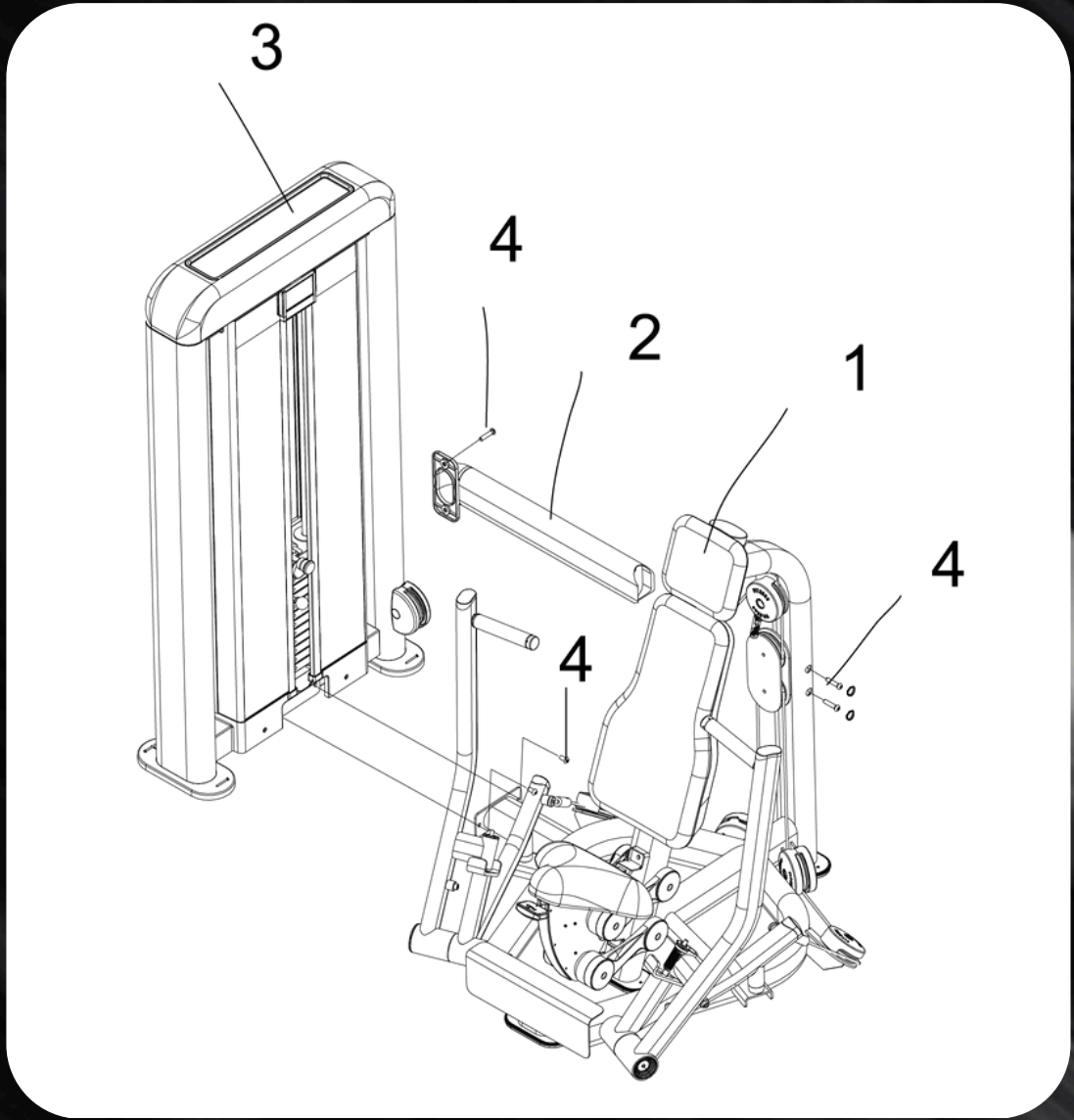
| No. | Name | Unit | Qty. |
|---|---|---|---|
| 1 | main frame component | pcs | 1 |
| 2 | back connecter component | pcs | 1 |
| 3 | weight stack frame welded component | pcs | 1 |
| 4 | M10 x 40 Hex Screw + Flat Washer | pcs | 6 |