ENDURANCE®
by Body-Solid

R300

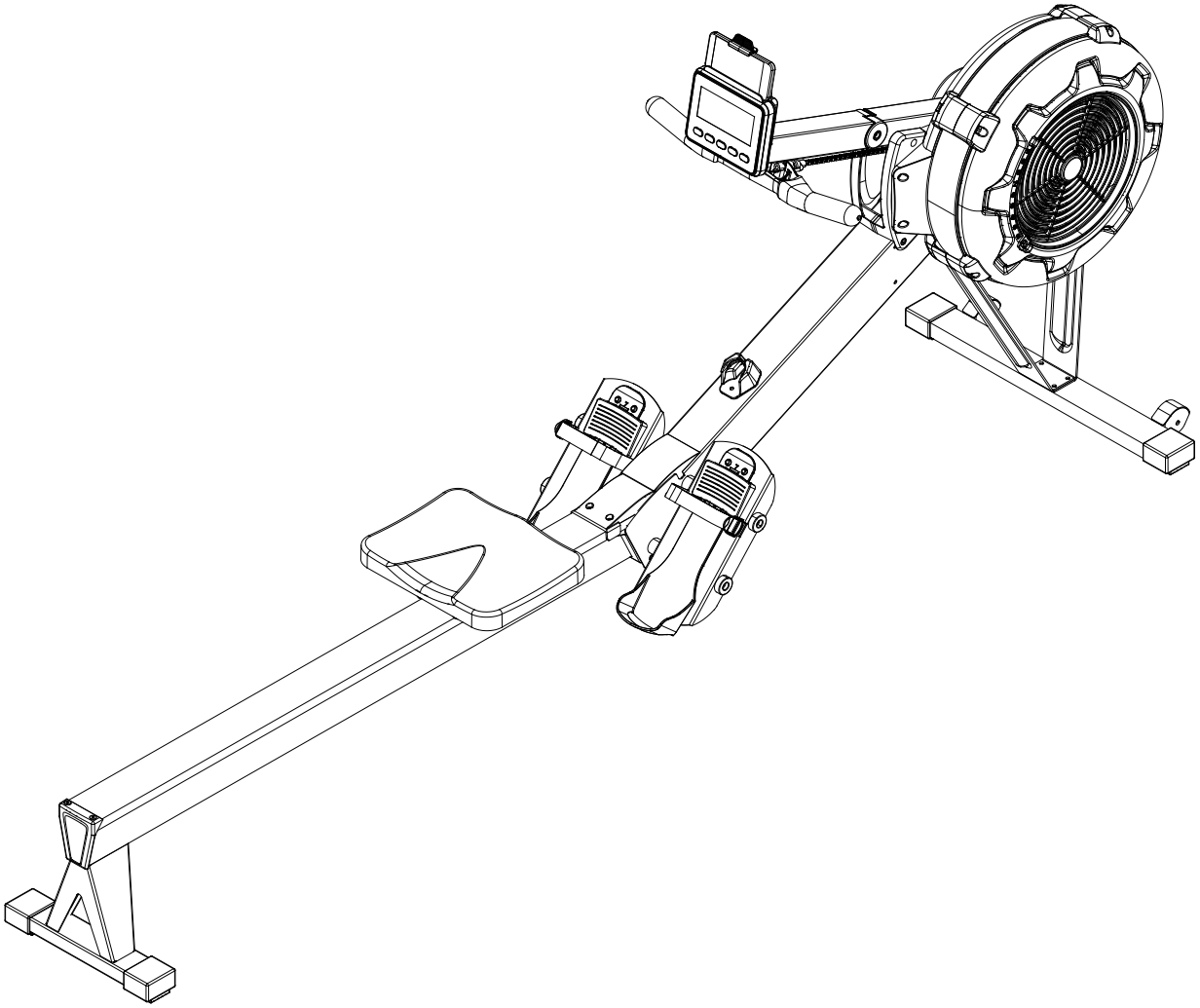

Endurance® R300 Rower

by Body-Solid

User Manual

v. R300-20200601

Table of Contents

CONGRATULATIONS.....3

IMPORTANT SAFETY INSTRUCTION.....4

SAFETY GUIDELINES.....5 - 6

ASSEMBLY INSTRUCTION.....7 - 19

OPERATING YOUR ROWER.....20 - 22

OPERATING THE CONSOLE.....23 - 27

MONITORING YOUR HEART RATE.....28

CHEST STRAP OPERATION.....29

BUNGEE CORD ADJUSTMENT.....30 - 31

CONSOLE MONITOR POST ADJUSTMENT .....32 - 33

PART LIST.....34 - 37

EXPLODED VIEW DIAGRAM.....38

CONGRATULATIONS

Congratulations!!

Thank you for purchasing your new Endurance Fan Rower.

Using state-of-the-art techniques, robust frame structure and superior ergonomic design, Endurance Fan Rower set a new standard for excellence. The Endurance Fan Rower can improve your quality of life by keeping you fit and healthy, increasing your energy levels and enhancing your lifestyle.

Endurance wants to ensure years of quality workouts with your new Fan Rower so we recommend that you read this manual carefully and thoroughly to fully understand proper use and maintenance of this product. Retain this Owner's Manual for future reference.

Please use this Owner's Manual to make sure that all parts have been included in your shipment. When ordering parts, you must use the part number and description from this Owner's Manual. Use only Endurance replacement parts when servicing this machine. Failure to do so will void your warranty and could result in personal injury.

For information about product operation or service, check out the official website at www.bodysolid.com/Home/Endurance-Cardio or contact an authorized dealer or a factory-authorized service company or contact Customer Tech Support at one of the following:

Toll Free: 1-800-556-3113
Phone: 1-708-427-3555
Fax: 1-708-427-3556
Hours: M-F 8:30-5:00 CST
E-Mail: service@bodysolid.com

Or write to:

Endurance Service Department
1900 S. Des Plaines Ave.
Forest Park, IL 60130 USA

Important Safety Instructions

Before beginning any fitness program, you should obtain a complete physical examination from your physician.

Il est conseille de subir un examen medical complet avant d'entreprendre tout programme d'exercise. Si vous avez des etourdissements ou des faiblesses, arretez les exercices immediatement.

When using exercise equipment, you should always take basic precautions, including the following:

- Read all instructions before using the R300. These instructions are written to ensure your safety and to protect the unit.
- Do not allow children on or near the equipment.
- Use the equipment only for its intended purpose as described in this guide. Do not use accessory attachments that are not recommended by the manufacturer. Such attachments might cause injuries.
- Wear proper exercise clothing and shoes for your workout, no loose clothing.
- Use care when getting on or off the unit.
- Do not overexert yourself or work to exhaustion.
- If you feel any pain or abnormal symptoms, stop your workout immediately and consult your physician.
- Never operate the unit after it has been dropped or damaged. Return the equipment to a service center for examination and repair.
- Never drop or insert objects into any opening in the equipment.
- Always check the unit before each use. Make sure that all fasteners are secure and in good working condition.
- Do not use the equipment outdoors or near water.

PERSONAL SAFETY DURING ASSEMBLY

- It is strongly recommended that a qualified dealer assemble the equipment. *Assistance is required.*
- Before beginning assembly, please take the time to read the instructions thoroughly.
- Read each step in the assembly instructions and follow the steps in sequence. Do not skip ahead. If you skip ahead, you may learn later that you have to disassemble components and that you may have damaged the equipment.
- Assemble and operate the R300 on a solid, level surface. Locate the unit a few feet from the walls or furniture to provide easy access.

The R300 is designed for your enjoyment. By following these precautions and using common sense, you will have many safe and pleasurable hours of healthful exercise with your Endurance R300.

After assembly, you should check all functions to ensure correct operation. If you experience problems, first recheck the assembly instructions to locate any possible errors made during assembly. If you are unable to correct the problem, call the dealer from whom you purchased the machine or call 1-800-556-3113 for the dealer nearest you.

Safety Guidelines

Successful cardio training programs have one prominent feature in common...safety. Cardio training has some inherent dangers, as do all physical activities.
The chance of injury can be greatly reduced or completely removed by using correct running techniques, proper breathing, maintaining equipment in good working condition, and by wearing the appropriate clothing.

- **It is highly recommended that you consult your physician before beginning any exercise program. This is especially important for individuals over the age of 35, or persons with pre-existing health problems.**
- **Always warm up before starting a workout. Try to do a total body warm up before you start. It is especially important to warm up the specific muscle groups you are going to be using. This can be as simple as performing a warm up set of high repetitions and light weight for each exercise.**
- **Always wear appropriate clothing and shoes when exercising. Wearing comfortable athletic shoes with good support and loose fitting, breathable clothing will reduce the risk of injury.**
- **Maintaining equipment in proper operating condition is of utmost importance for a safe cardio training program.**
- **Read and study all warning labels on this machine. It is absolutely necessary that you familiarize yourself and all others with the proper operation of this machine prior to use.**
- **Keep hands, limbs, loose clothing and long hair well out of the way of all moving parts.**
- **Inspect the machine daily for loose or worn parts. If a problem is found do not allow the machine to be used until all parts are tightened or worn or defective parts are repaired or replaced.**

Safety Guidelines

This exercise equipment is designed and built for optimum safety for home use. However, certain precautions always apply whenever you operate any exercise equipment.
Be sure to read the entire manual before assembly and operation of this machine. Also, please note the following safety precautions.

MECHANICAL SAFETY

- Inspect the equipment prior to exercising to ensure that all nuts and bolts are fully tightened before each use.
- Replace any defective components immediately and/or keep the equipment out of use until repair.
- Do not use attachments not recommended by the manufacturer.
- Never drop or insert an object into any opening.
- Only one person may use the rower at a time.
- Never activate the rower when someone is standing on the belt.

APPROPRIATE ATTIRE

- Always wear appropriate clothing.
  Do not wear loose clothing that might catch on any part of this rower.
- Always wear non-slippery shoes while working with the rower.
  Do not wear shoes with heels or leather soles.
  Check the soles of your shoes and remove any dirt and embedded stones.

CHILDREN AND PETS

- Most exercise equipment is not recommended for small children.
  Children should not use the equipment unless they are under *strict* adult supervision.
  To ensure safety, keep young children off the rower at all times.
- Exercise equipment has many moving parts.
  In the interest of safety, keep others (especially children and pets) at a safe distance while you exercise.

FCC WARNING - POSSIBLE RADIO/TELEVISION INTERFERENCE

NOTE: This equipment has been tested and found to comply with Part 15 of the FCC rules. These limits are designed to provide reasonable protection against harmful interference in a residential installation. Any changes or modifications not expressly approved by the party responsible for the compliance could void the user's authority to operate the equipment. This equipment generates, uses and can radiate radio frequency energy and, if not installed and used in accordance with the instructions, may cause harmful interference to radio communications. However, there is no guarantee that the interference will not occur in a particular installation.

If this equipment does cause harmful radio interference to radio or television reception, which can be determined by turning the equipment off and on, you are encouraged to try to correct the interference by one or more of the following measures:

Class R (Residential): Private or non-commercial use

- Reorient or relocate the receiving antenna
- Increase space between the equipment
- Plug the equipment into two electrical outlet located on separate circuits
- Consult an exercise equipment dealer or an experienced radio/TV technician for help

Assembly Instructions

Assembly of the R300 takes professional installers about 1/2 hour to complete. If this is the first time you have assembled this type of equipment, plan on significantly more time.

Professional installers are highly recommended!

However, if you acquire the appropriate tools, obtain assistance, and follow the assembly steps sequentially, the process will take time, but is fairly easy.

ASSEMBLY TIPS

Read all "*NOTES*" on each page before beginning each step.

While you may be able to assemble the R300 using the illustrations only, important safety notes and other tips are included in the text.

Some pieces may have extra holes that you will not use. Use only those holes indicated in the instructions and illustrations.

NOTE: To find out the length of a particular bolt, measure its shank (the long, narrow part beneath the head).

Refer to the following diagram:

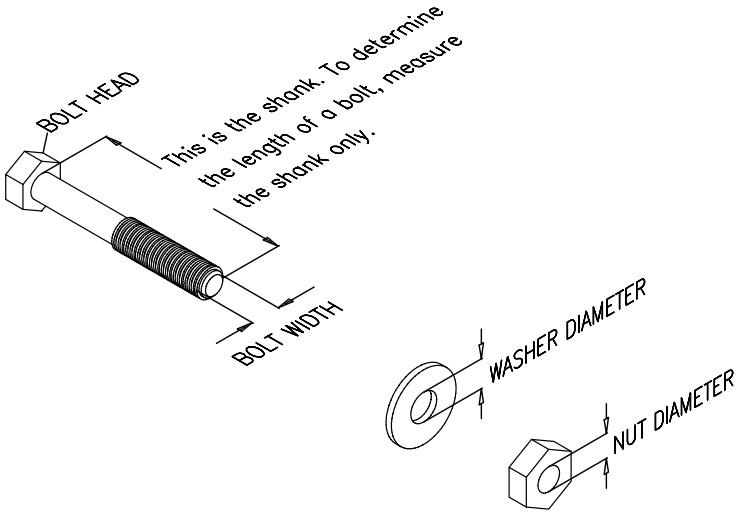

Do not fully tighten bolts until instructed to do so.

NOTE: After assembly, you should check all functions to ensure correct operation. If you experience problems, first recheck the assembly instructions to locate any possible errors made during assembly. If you are unable to correct the problem, call the dealer from whom you purchased the machine or call 1-800-556-3113 for the dealer nearest you.

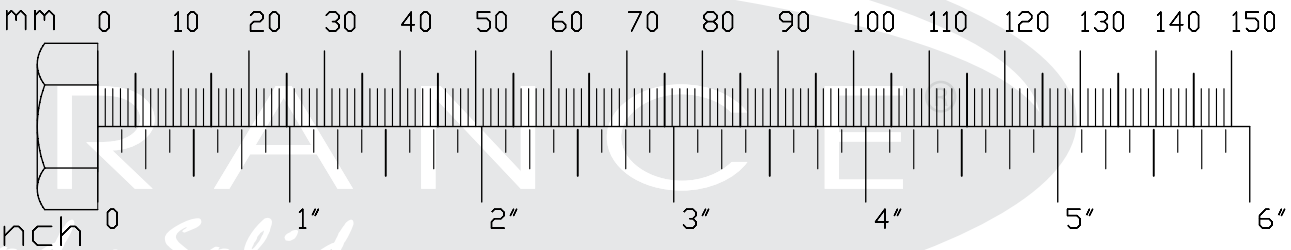

URANCE by Body-Solid

Step 1

Be careful to assemble all components in the sequence they are presented.

Note: Do not fully tighten bolts until instructed

A. Attach Front Support Legs (#7 & #8) to Front Stabilizer (#4) using:
M6x16mm Socket Head Cap Screw (#81), QTY: 4
M6 Flat Washer (#76), QTY: 4

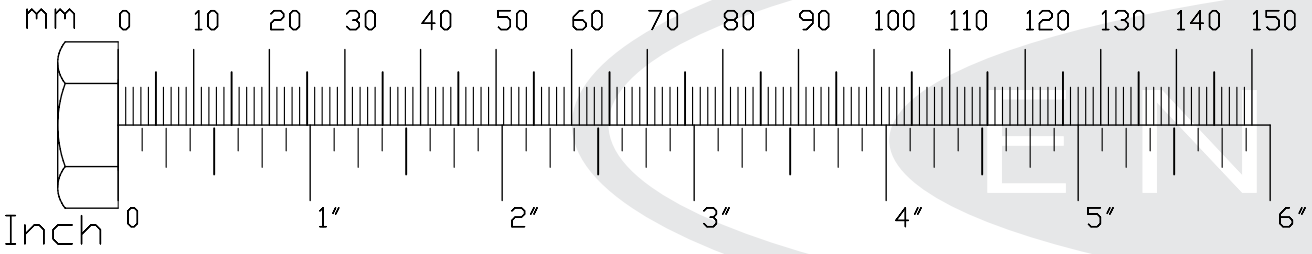

Step 1

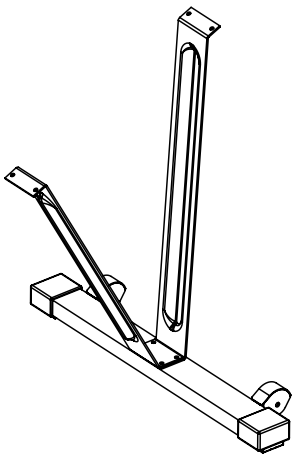

Above shows STEP 1 assembled and completed.

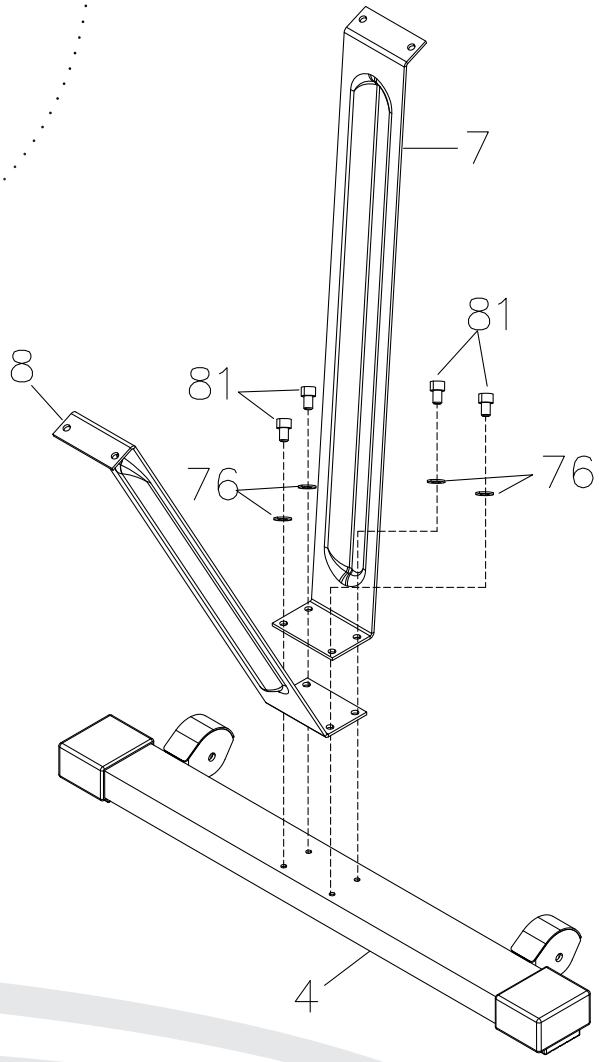

Step 2

Be careful to assemble all components in the sequence they are presented.

Note: Fully tighten bolts at the End of each Step.

A. Attach Front Support Legs (#7 & #8) to Main Frame (#175) using:
M6x16mm Socket Head Cap Screw (#81), QTY: 4
M6 Flat Washer (#76), QTY: 4

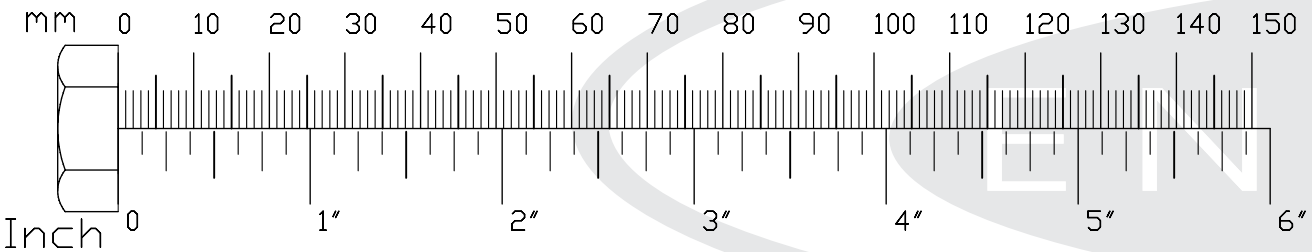

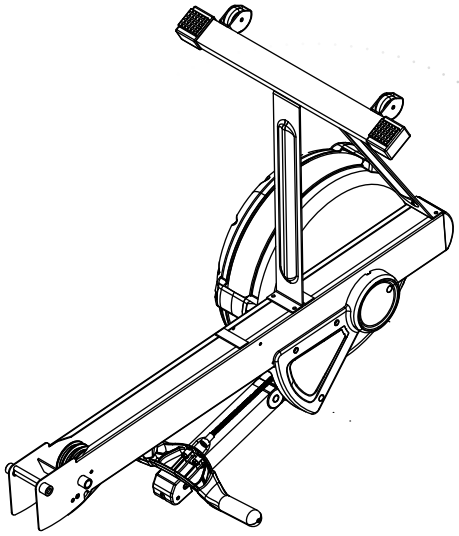

Above shows STEP 2 assembled and completed.

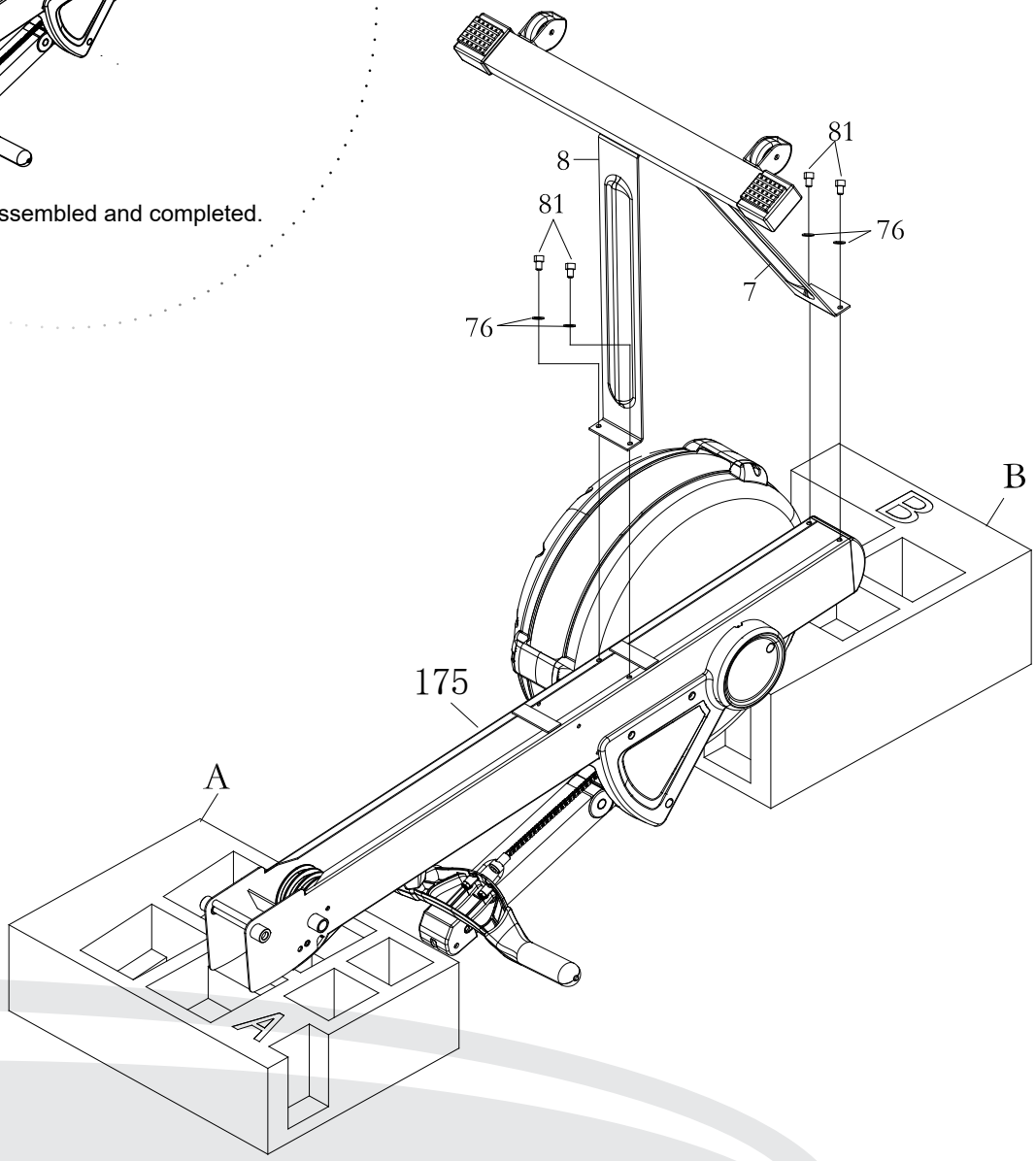

Step 3

Be careful to assemble all components in the sequence they are presented.

Note: Fully tighten bolts at the End of each Step.

A. Lift up the **Main Frame** (#175). Insert the **Pedal Shaft 16mm** (#139) and **Pedal Shaft 12mm** (#140) through right and left **Pedal Support Plate** (#177) and **Main Frame** (#175). Attached **Pedal Support Plate** (#177) on **Main Frame** (#175) by using **Socket Head Cap Screw, M8x20** (#173) and **Foot Pedal End Cap** (#178).

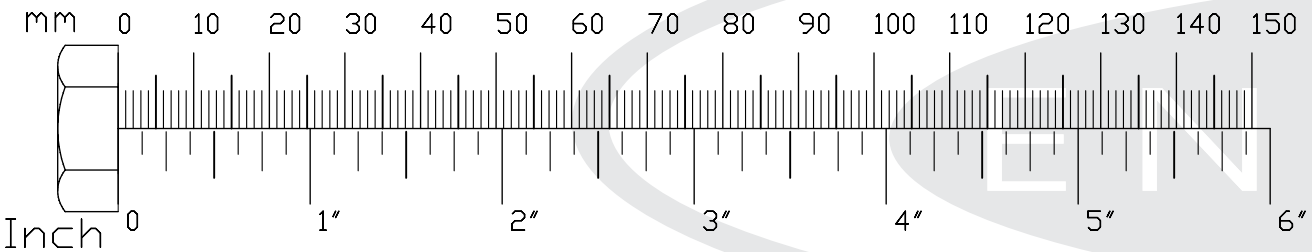

Step 3

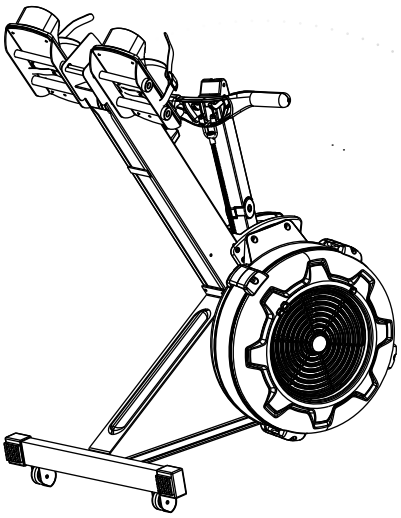

Above shows STEP 3 assembled and completed.

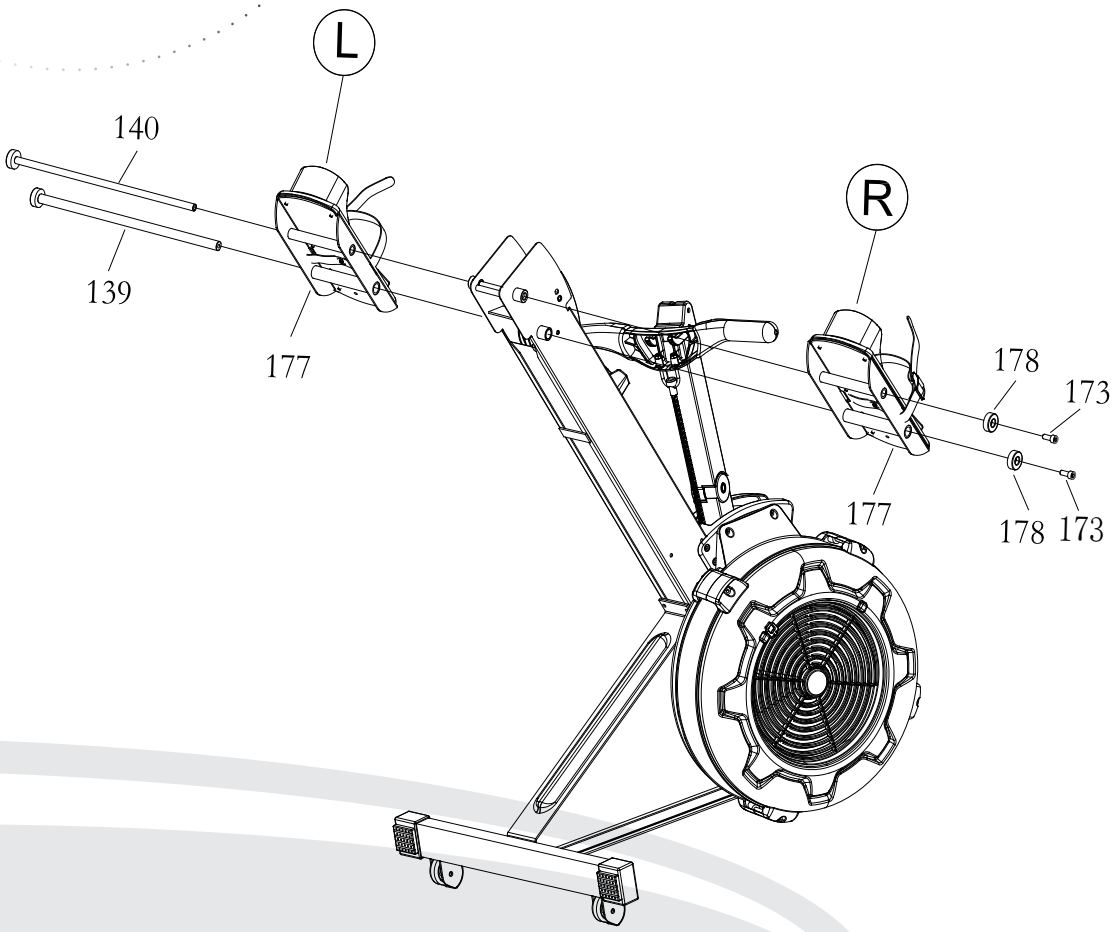

Step 4

Be careful to assemble all components in the sequence they are presented.

Note: Fully tighten bolts at the End of each Step.

A. One hand hold the **Pedal Strap** (47) and lifts up the **Main Frame** (#175), whilte the other hand lifts up the **Rail Frame** (#176) into the **Main Frame** (#175). Make the **Pedal Shaft 12mm** (#140) fit into the gap in the **Rail Frame** (#176). Finally, insert the **Pull Pin** (#98) into the **Main Frame** (#175).

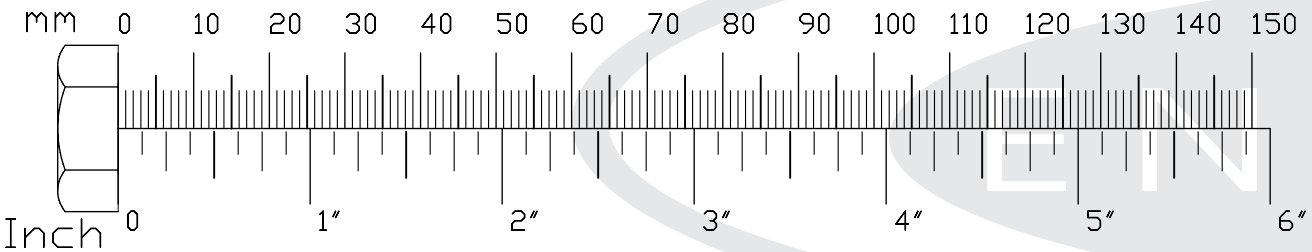

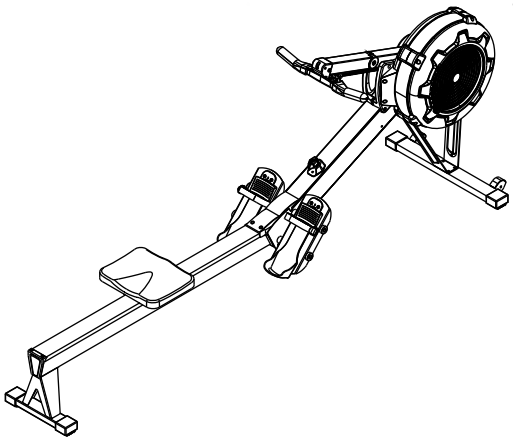

Above shows STEP 4 assembled and completed.

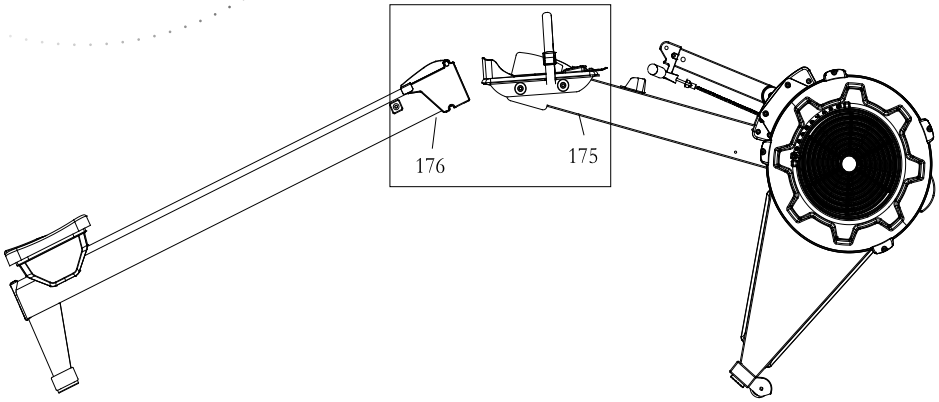

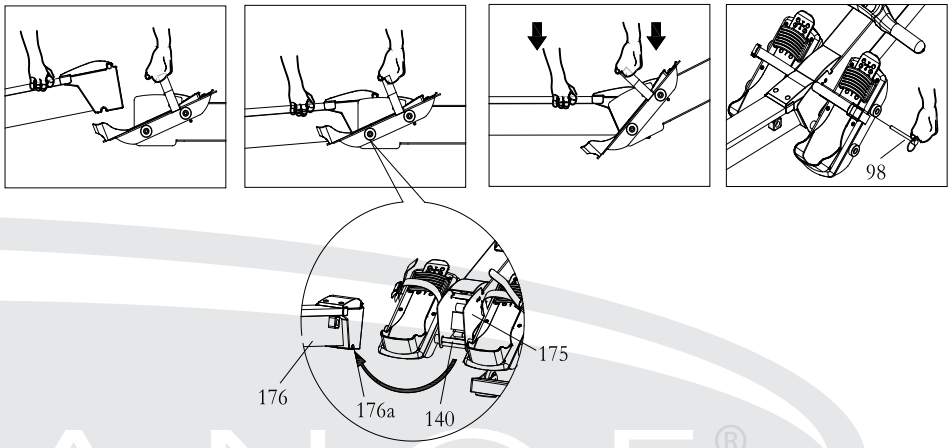

Step 5

Be careful to assemble all components in the sequence they are presented.

Note: Fully tighten bolts at the End of each Step.

A. Lift up the **Lower Console Monitor Post** (#135). Attach the **Lower Console Monitor Post** (#135) on **Left/Right Side Cover** (#57/58) by using **Philips Pan Head Screw, M6x12mm** (#131).

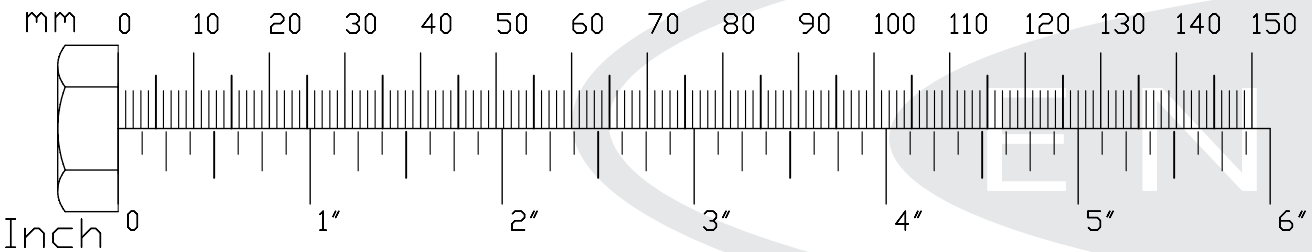

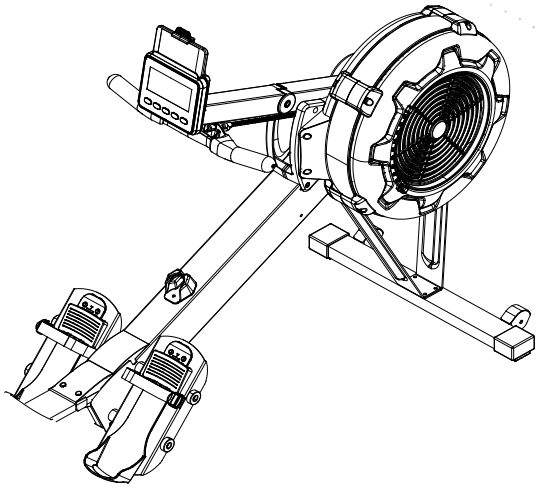

Above shows STEP 5 assembled and completed.

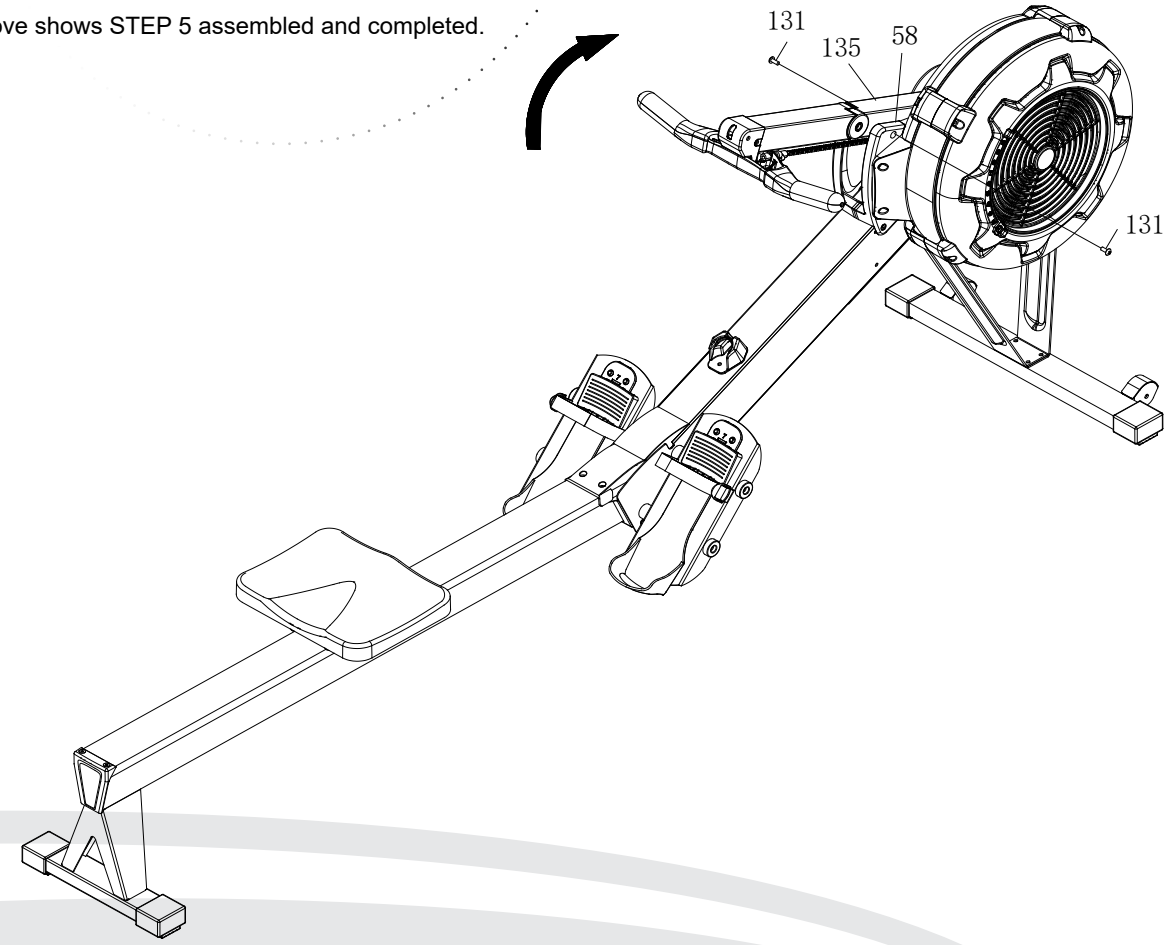

Step 6

Be careful to assemble all components in the sequence they are presented.

Note: Fully tighten bolts at the End of each Step.

A. Attach the **Console Monitor** (#19) to the **Console Mounting Braceket** (#179) by using **M8x75mm Button Head Cap Screw** (#78), **M8 Flat Washer** (#79), and **M8 Nylon Lock Nut** (#80).

B. Connet **Sensor Cable** (#23) into the back of the **Console Monitor** (#19a).

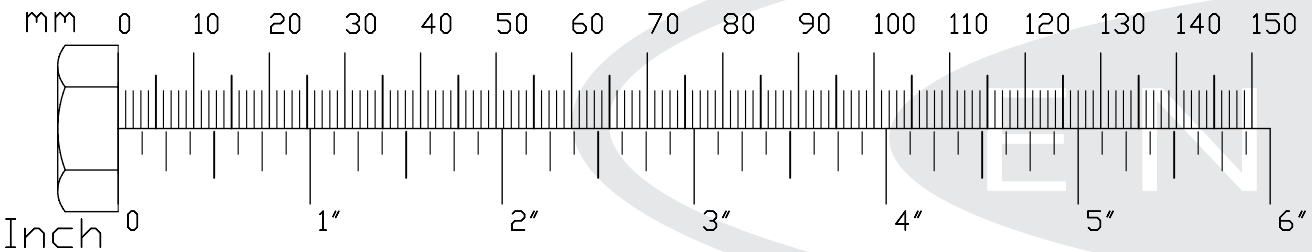

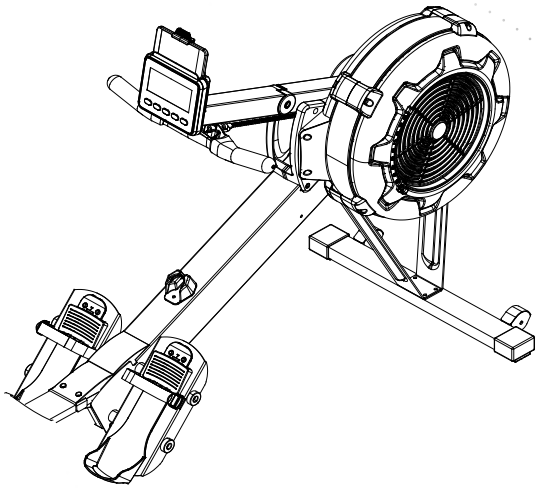

Above shows STEP 6 assembled and completed.

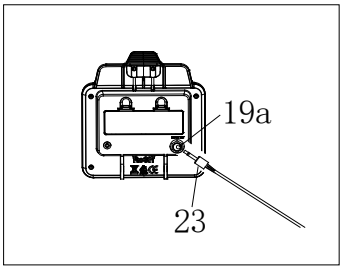

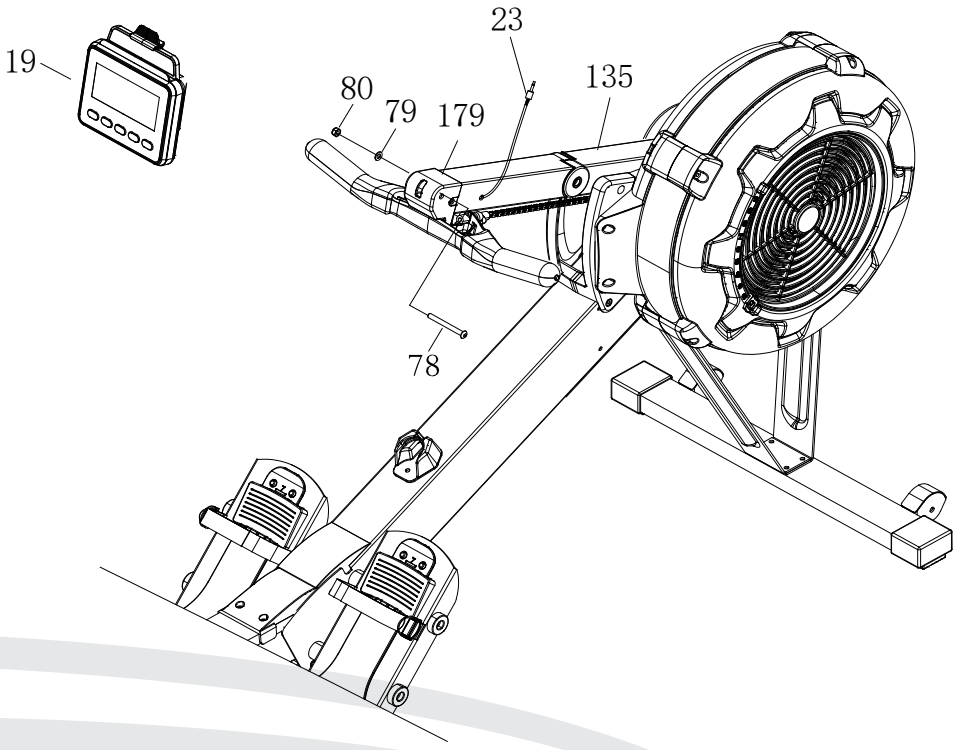

Operating your Rower

MOVING THE ROWER

The rower is easy to move around safely.
To move the rower:
1. Lift the rear of the rower
2. Roll the rower on its front transport wheels to the desire location.
3. Gently lower the rear of the rower to the ground level

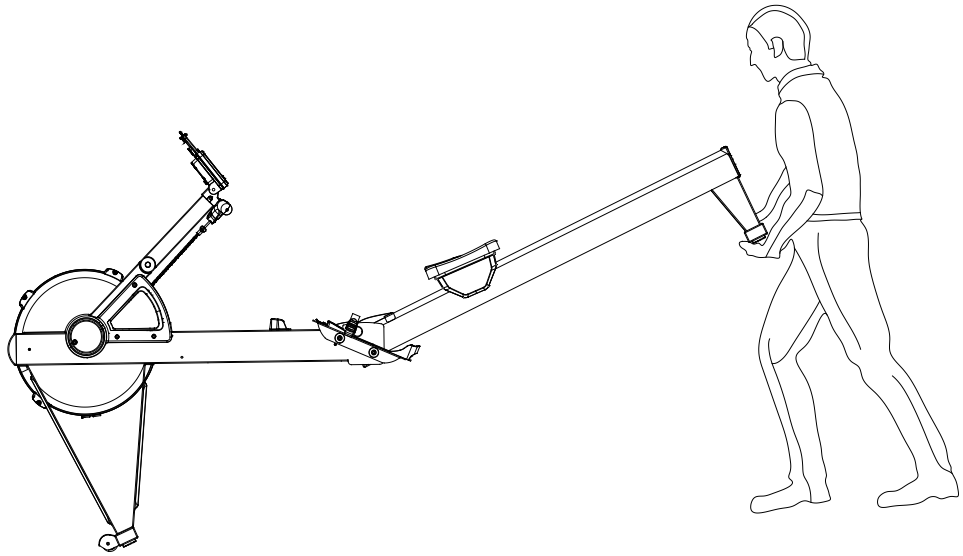

STORING THE ROWER

The rower can be seprated to minimize the unit size for storage.
1. Remove the Pull Pin (#98).
2. Lift up the Main Frame (#175) and pull out the Rail Frame (#176)
3. Insert the Pull Pin (#98) back to the hole in the Main Frame (#175)

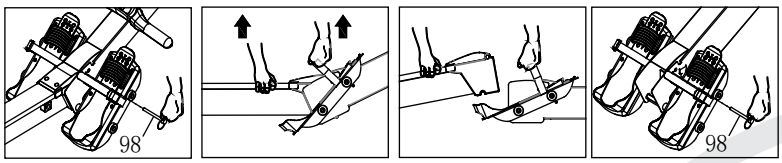

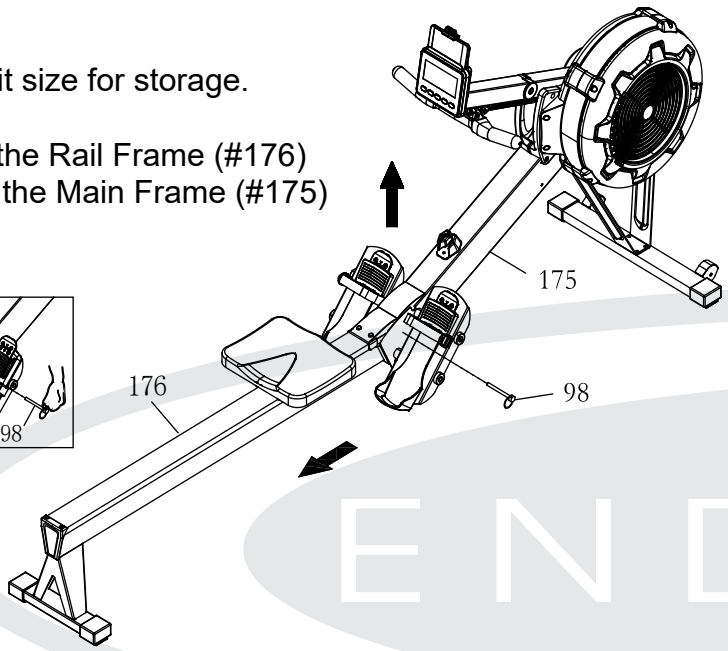

Operating your Rower

DAMPER ADJUSTMENT

There is a damper adjustment on the right side of the fan Shroud. The indicator can be moved up/down to adjust the damper. #1 is the lowest setting, #10 is the highest setting.

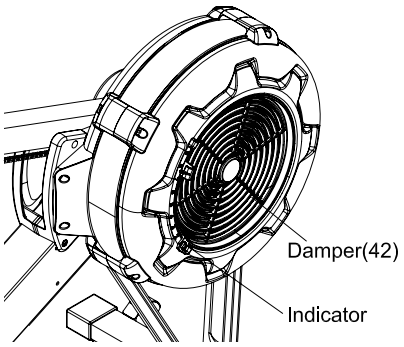

HANDLEBAR POSITION

Handlebar (#3) can be placed on the hook of the Console Monitor Post (#6) or it can be placed on the Handlebar Holder (#52).

A.

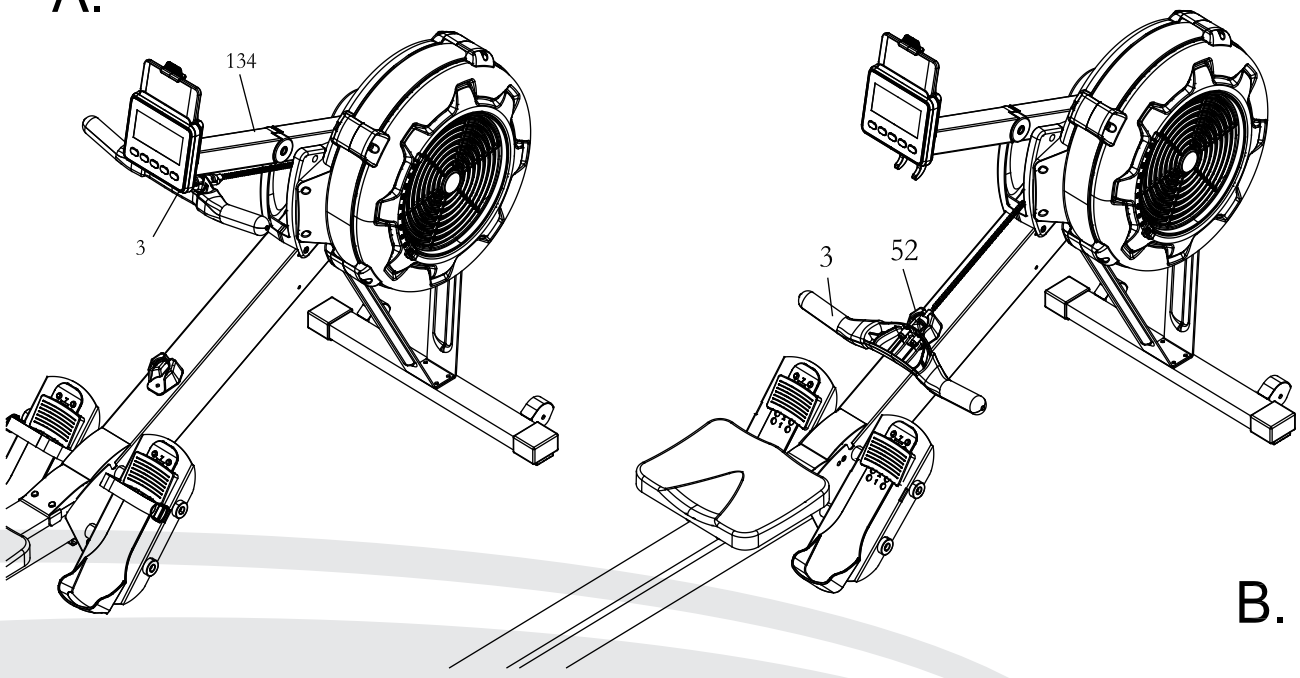

B.

Operating your Rower

FOOT PEDAL ADJUSTMENT

1. Pull the Foot Pedal (#45) out of the two bulges of the Pedal Support Plate (#177).
2. Lower or raised the Foot Pedal to the desired location.
3. Lock the Foot Pedal (#45) by pressing the adjustment holes onto the Bulges.

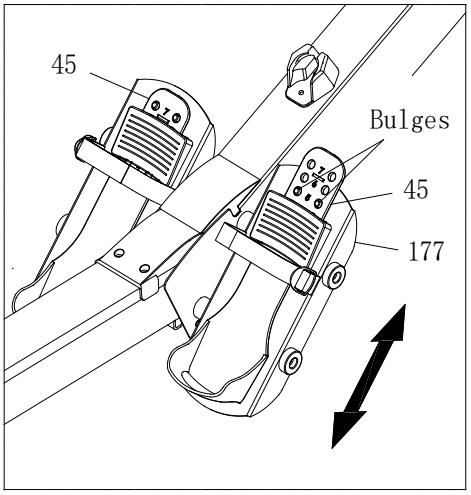

CELL PHONE HOLDER.

Slide the cell phone into the space between the Cell Phone Bracket (#156) and Console Monitor (#19) by moving the Cell Phone Bracket (#156) up or down.

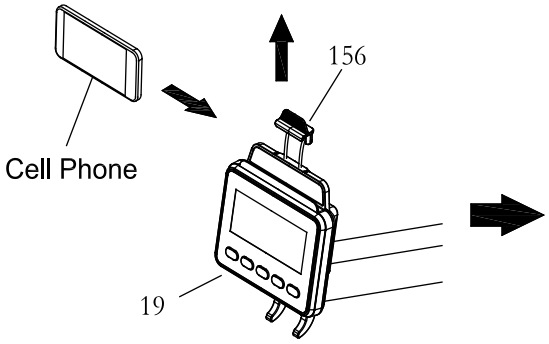

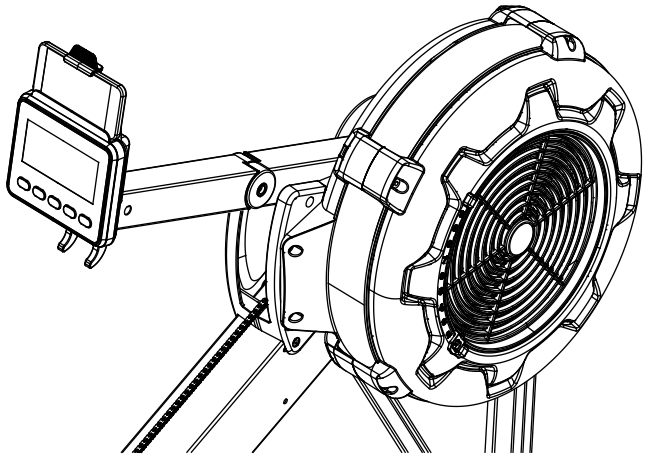

Operating the Console



CONSOLE DISPLAY

TIME:
- Display flashing “00:00” for presetting the TIME program. Time can be set from 1:00 to 99:00 minutes
- Displays the time during exercise.

STROKE:
- Display the total number of stroke during exercise

PULSE:
- Display the heart rate from 40 to 220 beats per minute during exercise. To use this function, the user must wear the Heart Rate Chest Strap.

URANCE®
by Body-Solid

Operating the Console

CALORIES:
- Display flashing “100” for presetting CALORIES program. The target calories value can be set from 10 to 999 cals

PADDLE WIDTH:
- Display the distance per stroke.

STROKE RATE:
- Display the current stroke per minute during exerices.

DISTANCE:
- Display flashing “500” for presetting DISTANCE program. The target distance value can be set from 500 to 9999. The unit is in feet or meter.

CYCLE:
- Display flashing “8” for prestting the number of cycle for the INTERVAL program. The value can be set from 1 to 99.
- Value will count down from the preset value during INTERVAL program.

WATTS:
- Display the amount of power generated at any moment during the workout.

CONSOLE BUTTONS

BACK BUTTON:
- Press the button to return to the previous program
- When the program is stopped or finished, press the button to return to IDLE mode.

UP & DOWN BUTTONS:
- Press the buttons to adjust the value in the program.

SELECT BUTTON:
- In IDLE mode, press the button the select through each program options.

The program options are QUICK START, TIME, DISTANCE, CALORIES, PLAY THE GAME, and INTERVAL PROGRAMS of 20/10, 10/20 & 10/10.

Operating the Console

ENTER/STOP BUTTON:
- Press the button to confirm the value in the program.
- Press and hold the button for three seconds to reset the console program.
- Press the button to pause the program during workout.

INITIAL SETUP

POWER ON:
- Move the Handlebar or press any button.

POWER OFF:
- In IDLE mode, if there is no activitiy detected for 20 seconds, the console will shut off automatically.
- During all programs except 20/10, 10/20, 10/10 interval programs, the console will shut off if there is no activity detected for 30 seconds.
- During 20/10, 10/20, 10/10 interval programs, the console will shut off if there is no activity detected for two minutes.

METRIC & STANDARD UNIT:
The initial factory setting is in “KM”. To toggle between Miles and Kilometers, press and hold “UP” & “DOWN” buttons, It will display flashing “KM” & “MILE”. Press “UP” or “DOWN” arrows to select “KM” or “MILE” and then press “ENTER” to confirm.

BATTERY INSTALLATION:
Console operates on two Size C batteries. The battery compartment is on the back of the console. Battery is not included.

PROGRAMS

The Console Monitor has eight programs: QUICK START, TIME, DISTANCE, CALORIES, PLAY THE GAME, and INTERVAL PROGRAMS of 20/10, 10/20 & 10/10.

Operating the Console

1. QUICK START PROGRAM
To Quick Start the program, you can pull on the Handlebar (#30) to start. All fuction values fo the console will count up.

For the other seven programs, press the **"BACK"** button to enter IDLE mode. Or press and hold the **"ENTER/STOP"** button for three second to restart the console. Use the **"SELECT"** button to toggle between programs. Use **"UP" & "DOWN"** Buttons to adjust the value and press **"ENTER/STOP"** to confirm.

2. DISTANCE PROGRAM
During the workout, the **"DISTANCE"** program will count down from preset value. The program will start once the user pulls the Handlebar. When the program is finished, the monitor will show **"WINNER"** with an audible alarm. Press the **"BACK"** button to go to the IDLE mode.

3. TIME PROGRAM
During the workout, the **"TIME"** program will count down from preset value. The program will start once the user pulls the Handlebar. When the program is finished, the monitor will end with an audible alarm. Press the **"BACK"** button to go to the IDLE mode.

4. CALORIES PROGRAM
During the workout, the **"CALORIES"** program will count down from preset value. The program will start once the user pulls the Handlebar. When the program is finished, the monitor will show **"END"** with an audible alarm. Press the **"BACK"** button to go to the IDLE mode.

5. GAME PROGRAM
When the **"GAME"** program is selected, The program will start once the user pulls the Handlebar. There is no presetting value to be entered. When the program is finished, the monitor will show your score with an audible alarm. Press the **"BACK"** button to go to the IDLE mode.

Operating the Console

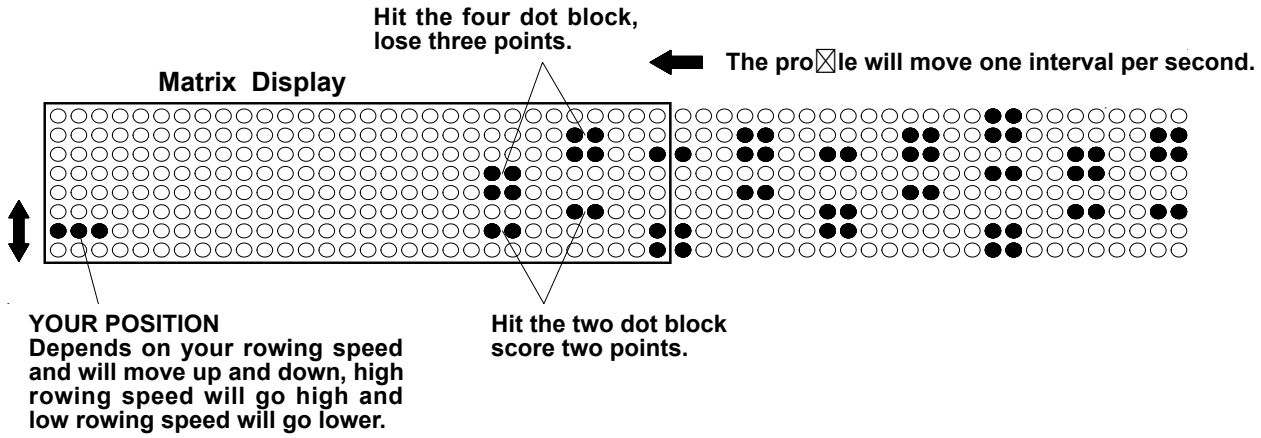

6. 20/10 INTERVAL PROGRAM

When it is in the **"20/10 INTERVAL"** program, the console monitor will display flashing **"8"** for presetting value of cycle. The user can use **"UP" & "DOWN"** buttons to input the value from 1 to 99. The user will workout for 20 seconds and then rest for 10 seconds. When the program is finished, the monitor will end with an audible alarm. Press the **"BACK"** button to go to the IDLE mode.

7. 10/20 INTERVAL PROGRAM

When it is in the **"10/20 INTERVAL"** program, the console monitor will display flashing **"8"** for presetting value of cycle. The user can use **"UP" & "DOWN"** buttons to input the value from 1 to 99. The user will workout for 10 seconds and then rest for 20 seconds. The program will start once the user pulls the Handlebar. When the program is finished, the monitor will end with an audible alarm. Press the **"BACK"** button to go to the IDLE mode.

8. 10/10 INTERVAL PROGRAM

When it is in the **"10/10 INTERVAL"** program, the console monitor will display flashing **"8"** for presetting value of cycle. The user can use **"UP" & "DOWN"** buttons to input the value from 1 to 99 for number of cycle, workout time and rest time. The program will start once the user pulls the Handlebar. When the program is finished, the monitor will end with an audible alarm. Press the **"BACK"** button to go to the IDLE mode.

URANCE®
by Body-Solid

Monitoring Your Heart Rate

FITNESS SAFETY

The Heart Rate chart indicates average rate zones for different ages. A variety of different factors (including medication, emotional state, temperature and other conditions) can affect the target heart rate zone that is best for you. Your physician or health care professional can help you determine the exercise intensity that is appropriate for your age and condition.

(MHR) = *Maximum Heart Rate*
(THR) = *Target Heart Rate*

220 - Age = *Maximum Heart Rate (MHZ)*
MHZ x .60 = *60% of your Maximum Heart Rate.*
MHZ x .75 = *75% of your Maximum Heart Rate.*

For example, if you are 30 years old, your calculations will be as follows:
220 - 30 = 190
190 x .60 = 114 (Low End or 60% of MHZ)
190 x .75 = 142 (High End or 75% of MHZ)
30 Year-Old (THR) Target Heart Rate would be 114-142

Maximum Heart Rate (MHR)

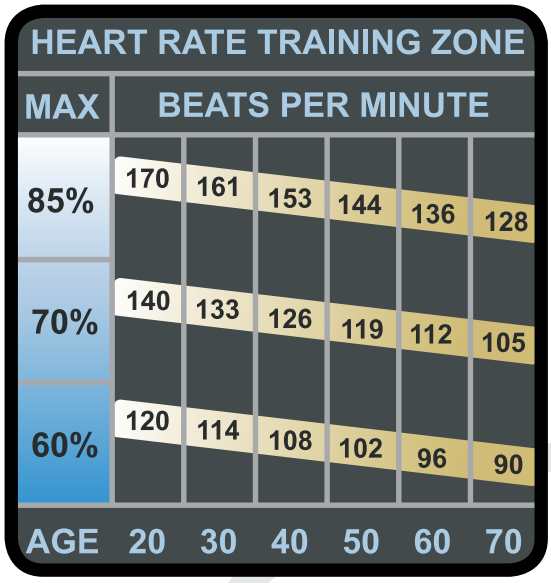

Heart Rate Training Zone

Chest Strap Operation

Your Endurance® Fan Rower has the capability to determine Heart Rate with the use of a Heart Rate Chest Strap. A Heart Rate Chest Strap can be purchased seperately.

It is suggested for the Chest Strap Transmitter that you position the transmitter as close to your heart as possible, against the skin, 1-2 inches below the pectoral muscles. For best results, moisten the back of the transmitter for better contact.

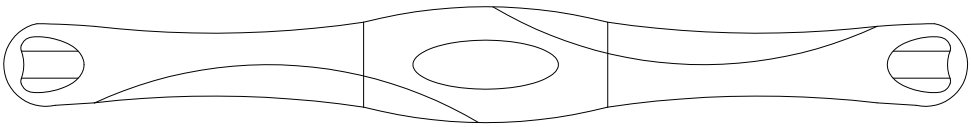

HR Chest Strap for Endurance® models

SAFETY PRECAUTIONS AND TIPS FOR CHEST STRAP

1. It is the owner's responsibility to ensure that all users of this unit have read the Owner's Manual and are familiar with warnings and safety precautions.
2. Do not place chest strap near devices that generate large magnetic fields. TV sets, electric motors, radios, and high voltage power lines can affect the transmitter's performance. These items can interfere with the heart rate signal and possibly affect the heart rate readings on the console.
3. Handle the Chest Strap with care. Dropping the transmitter might cause damage that could void the warranty.
4. Do not use the chest strap if you have a cardiac pacemaker or if your are taking medications for a heart condition. Medication or electrical pulses from the pacemaker can interfere with accurate heart rate readings.
5. Do not bend the strips inside the chest strap. This can cause the chest strap to loose conductivity.
6. The chest strap has batteries that need to be replaced periodically. A faulty battery can cause inaccurate reading.

Bungee Cord Adjustment

The Bungee Cord (#38) may stretch after 250,000 Strokes. Please follow the instruction to properly adjust the tension of the Bungee Cord.

1. Position the Main Frame (#175) as shown in below Drawing. Remove the Main Frame Cap (#68) from the Main Frame (#175). Remove the bottom Cover (#70) from the Main Frame (#175).

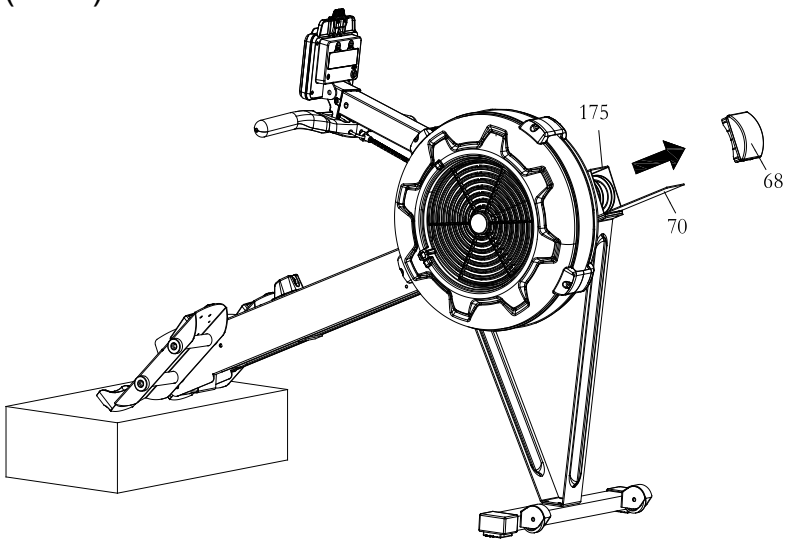

2. Position the Main Frame (#175) as shown in the next drawing. Unhook the left Bungee Cord Hook (#12L) from the Main Frame (#175). Make a mark on the Bungee Cord (#38) to move the hook forwarder 2 inches. Refer to Drawing View #1 to #3 to untie the Left Bungee Cord (#38) and move the hook (#12L) forward 2 inches. Refer to Drawing View #4 to #6 to tie back to the Hook (#12L) again. Put the Hook (#12L) back into the Main Frame (#175) and push the Hook (#12L) to the left side to touch the inner wall of the Main Frame (#175).

3. Do the same procedure as above to adjust the Bungee cord (#38) on the right side.

CAUTION: Always use two hands with a secured grip when re-attaching the Bungee Cord Hooks (12L & 12R).

END

Bungee Cord Adjustment

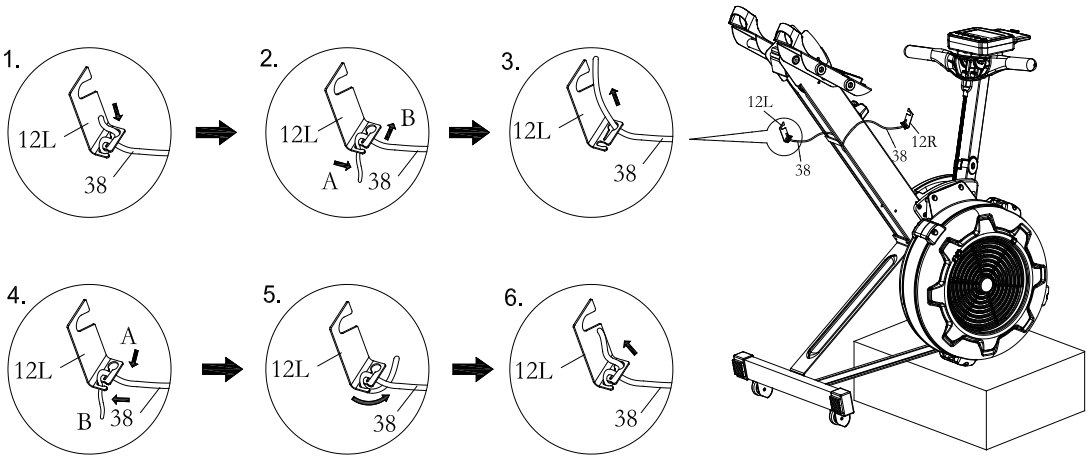

4. Position the Main Frame (#175) as shown in the below Drawing. Slide the Bottom Cover (#70) back into the Main Frame (#175). Put the Main Frame Cap (#68) back into the Main Frame (#175).

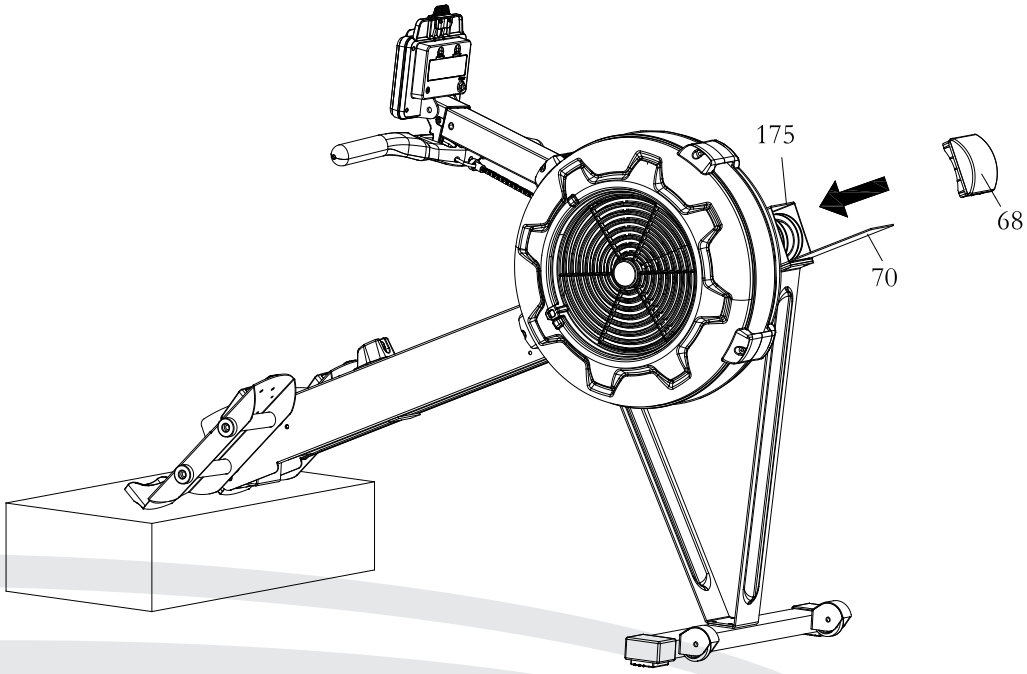

URANCE®
by Body-Solid

Console Monitor Post Adjustment

Hold the **Console Monitor** (#19) by 2 hands, then adjust the **Upper Console Monitor Post** (#134) up and down to the best position for you.

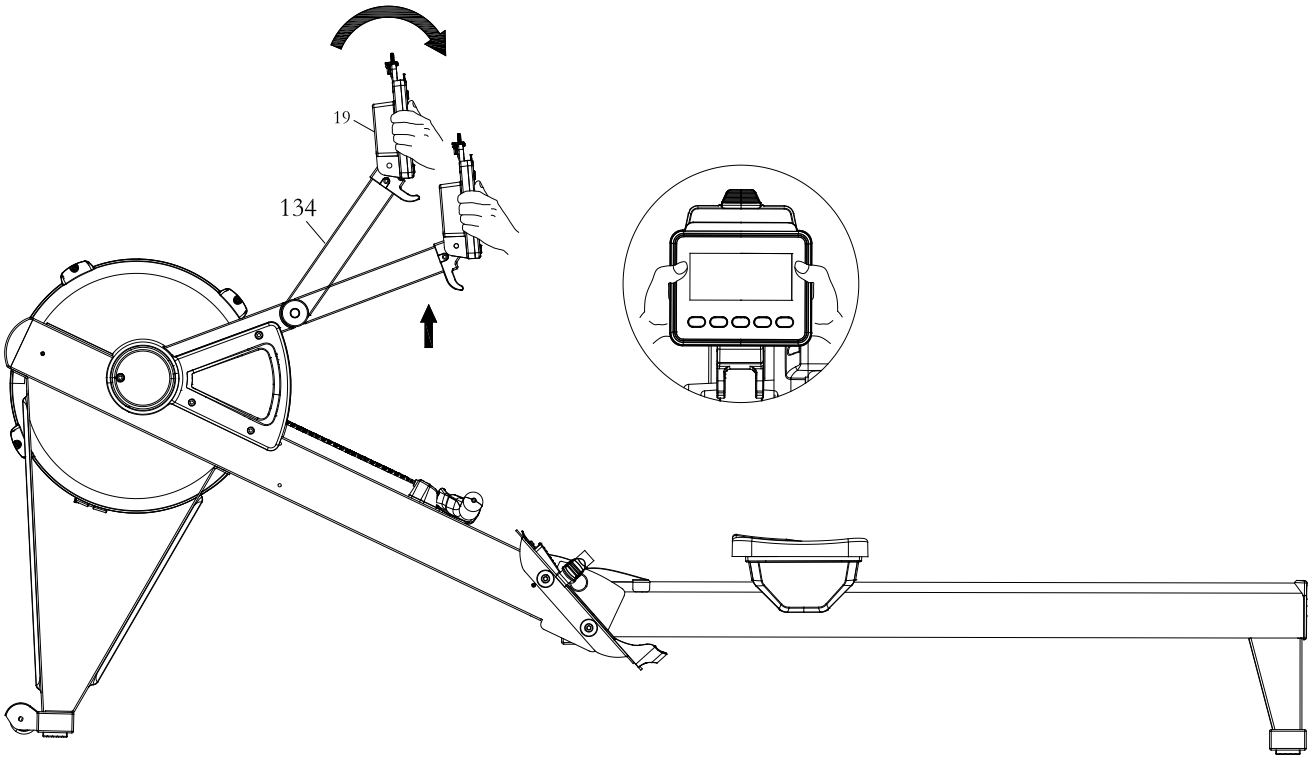

Console Monitor Post Adjustment

If the **Lower Console Monitor Post** (#135) is getting loosen, please tighten **Socket Head Cap Screw, M6x16mm** (#99) by using **Allen Wrench** (5mm).

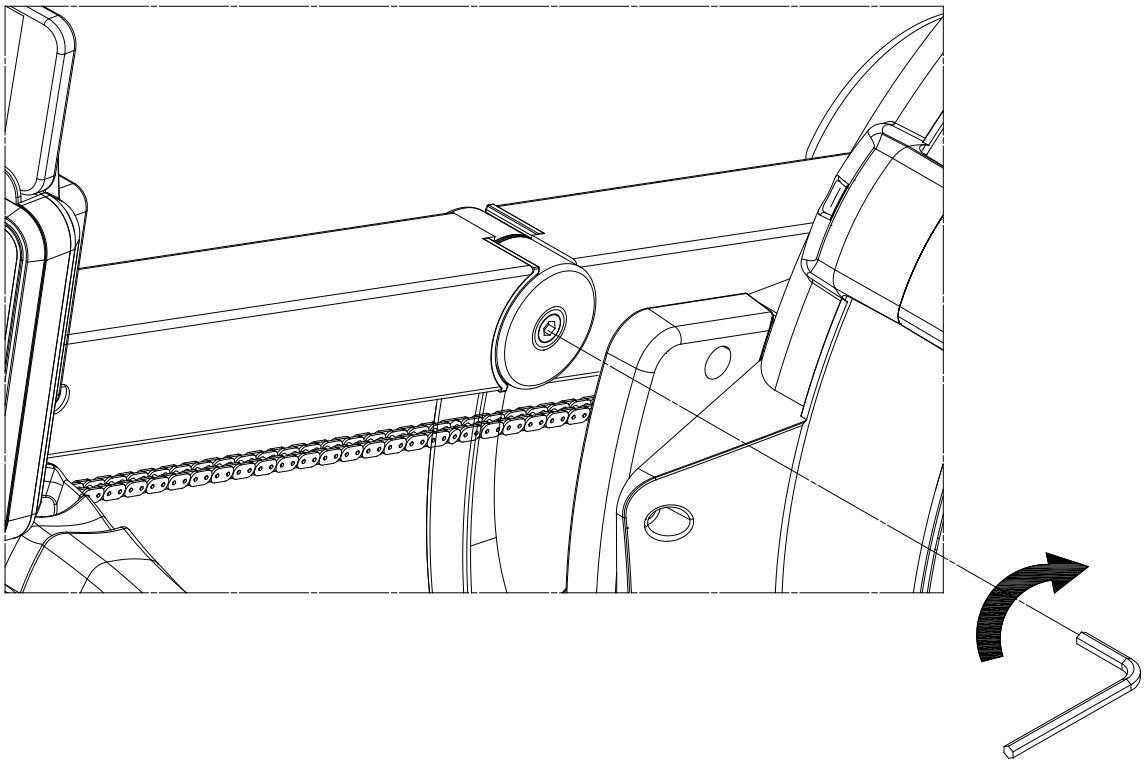

Part List

PART#	QTY	DESCRIPTION
3	1	Handlebar
4	1	Front Stabilizer
7	1	Front Support Leg A
8	1	Front Support Leg B
10	1	Seat Carriage
11	1	Fan
12	2	Bungee Cord Hook
13	1	Chain Bracket
14	1	Rail
15	1	Perforated Steel Mesh
16	6	Spacer, Ø8.2xØ12x3.2mm
17	2	Spacer, Ø8.2xØ12x71.6mm
18	1	Spacer, Ø6.2xØ10x15.5mm
19	1	Console Monitor
22	1	Generator
23	1	Sensor Cable
24	1	Shaft, M6xØ12x80mm
25	3	Shaft, M6xØ10x76.5mm
26	1	Fan Axle
27	1	Hook Connector
28	1	Chain Connector
29	1	U Bolt
30	1	Inner Spacer
31	1	outer Collar
32	1	Bearing 6003RS
33	6	Bearing 608ZZ
34	3	Bearing 6201RS
35	1	One Way Bearing HF2016
36	1	Chain
37	1	Sprocket
38	1	Bungee Cord
39	4	Bungee Cord Pulley
40	2	Chain Roller
41	8	Bearing 6000ZZ

END

Part numbers are required when ordering parts.

Part List

PART#	QTY	DESCRIPTION
42	1	Damper
43	1	Right Fan Shroud
44	1	Left Fan Shroud
45	2	Foot Pedal
46	2	Foot Pedal Holder
47	2	Pedal Strap
48	2	Spacer, ø10xø16x30.5mm
49	1	Pulley Spacer, ø10xø16x26.5mm
50	2	Pulley Bushing
51	1	Seat
52	1	Handlebar Holder
53	1	Upper Joint Cover
54	1	Lower Joint Cover
55	1	Generator Base
56	1	Damper Cap
57	1	Left Side Cover
58	1	Right Side Cover
59	4	Foot Cap
60	2	Steel Plate
61	1	Bushing 6001
62	1	Bushing 6003
63	2	Guide Roller
64	4	Seat Roller
65	2	Roller Sleeve
66	2	Transport Wheel
67	1	Rail End Cap
68	1	Main Frame Top Cap
70	1	Bottom Cover
71	3	Plastic Washer, ø10.2xø14x1mm
72	11	Phillips Head Screw, M6x10mm
73	7	Lock Washer, Internal Tooth M6
74	4	Nylon Lock Nut, M6
75	11	Phillips Head Screw, ST4.2x10mm
76	22	Flat Washer, M6
77	2	Socket Head Cap Screw, M8x65mm
78	1	Button Head Cap Screw, M8x75mm
79	9	Flat Washer, M8
80	9	Nylon Lock Nut, M8
81	8	Socket Head Cap Screw, M6x16mm
82	2	Socket Head Cap Screw, M8x40mm

URANCE®
by Body-Solid

Part numbers are required when ordering parts.

Part List

PART#	QTY	DESCRIPTION
83	2	Phillips Flat Head Screw, M6x16mm
85	2	Socket Head Cap Screw, M8x110mm
86	2	Button Head Cap Screw, M8x25mm
87	4	Lock Washer, M8
88	6	Phillips Pan Head Self-Tapping Screw, ST4.2x16mm
90	4	Socket Head Cap Screw, M5x92mm
91	4	Hex Nut, M5
92	2	Chain Hook
93	1	Elastic Ring
94	2	Nylon Lock Nut, M10
95	6	Phillips Pan Heand Self-Tapping Screw, ST4.2x6mm
96	1	Phillips Head Screw, M4x45mm
97	1	Hex Nut, M4
98	1	Pull Pin
99	13	Socket Head Cap Screw, M6x16mm
101	7	Phillips Truss Head Screw, M6x10mm
102	1	Screwdriver
103	2	Allen Wrench, 6mm
104	1	Wrench
105	2	Hex Nut, M6
106	2	PU Spacer
107	1	Plug
108	1	Bearing, 6001RS
109	3	Balance Weight
110	1	Bearing Bushing
111	3	Socket Head Cap Screw, M4x12mm
112	2	Washer, ø12xØ3.5x1mm
113	2	Phillips Pan Head Self-Tapping Screw. ST3.5x12mm
114	1	Allen Wrench, 5mm
115	1	Magnet
116	2	Stopper Bumper
117	2	Socket Head Cap Screw, M8x20mm
118	2	Stopper Bracket
119	1	Manual
121	2	Pedal Strap Stopper Plate
122	2	Pedal Strap Fix Plate
123	4	Phillips Flat Head Screw, M5x12mm

END

Part numbers are required when ordering parts.

Part List

PART#	QTY	DESCRIPTION
125	1	Philips Truss Head Screw, M6x30mm (10mm Tooth)
126	8	Spring Washer M6
128	1	Thick Nylon Nut M6
131	2	Philips Pan Head Screw, M6x12mm
134	1	Upper Console Monitor Post
135	1	Lower Console Monitor Post
136	1	Screw Shaft
137	1	Small Pulley Bushing
138	2	Rotation Sleeve
139	1	Pedal Shaft 16mm
140	1	Pedal Shaft 12mm
156	1	Smart Phone Holder
157	1	Bungee Cord of Smart Phone Holder
158	1	Left Joint Cover
159	1	Right Joint Cover
163	1	Console EVA Pad
164	1	Smart Phone Holder EVA Pad
166	3	Philips Pan Self-Tapping Screw ST4.2x35mm
173	4	Socket Head Cap Screw M8x20mm
174	1	Seat Carriage Cover
175	1	Main Frame
176	1	Rail Frame
177	2	Pedal Support Plate
178	4	Foot Pedal End Cap
179	1	Console Mounting Bracket
180	4	Socket Head Cap Screw M5x16mm
181	1	Philips Truss Head Screw M6x28mm

URANCE®
by Body-Solid

Part numbers are required when ordering parts.

Exploded View Diagram

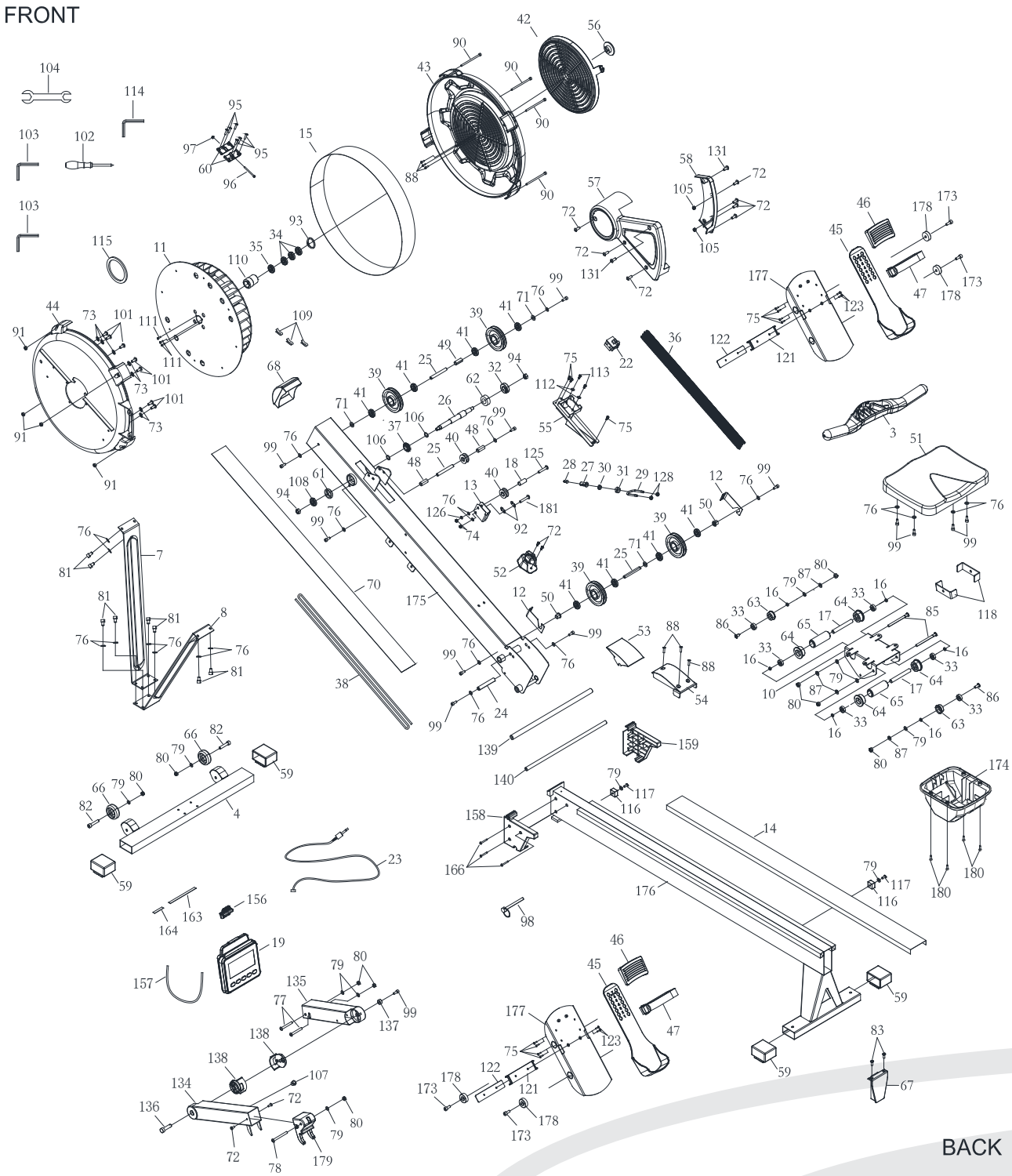

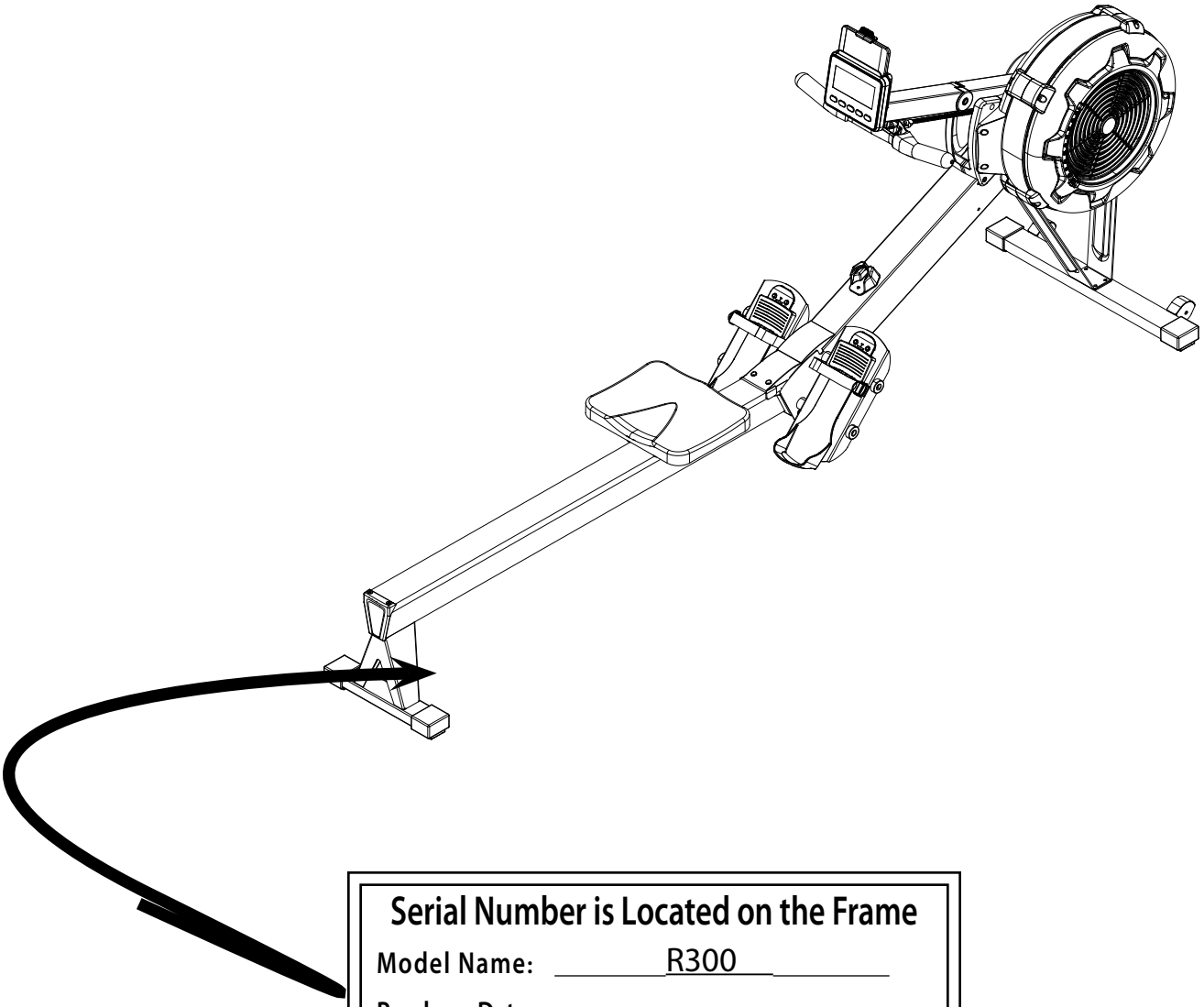

Serial Number is Located on the Frame

Model Name: R300

Purchase Date: _____

Serial Number: 013438-_____

ENDURANCE® by Body-Solid

Customer Tech Support Hotline

Toll Free: 1-800-556-3113
Phone: 1-708-427-3555
Fax: 1-708-427-3556
Hours: M-F 8:30-5:00 CST
E-Mail: service@bodysolid.com

© Copyright 2009. Body-Solid. All rights reserved. Body-Solid reserves the right to change design and specifications when we feel it will improve the product. Body-Solid machines maintain several patented and patent pending features and designs. All rights reserved on all design patents and utility patents.