Body-Solid®

Built for Life

SGT

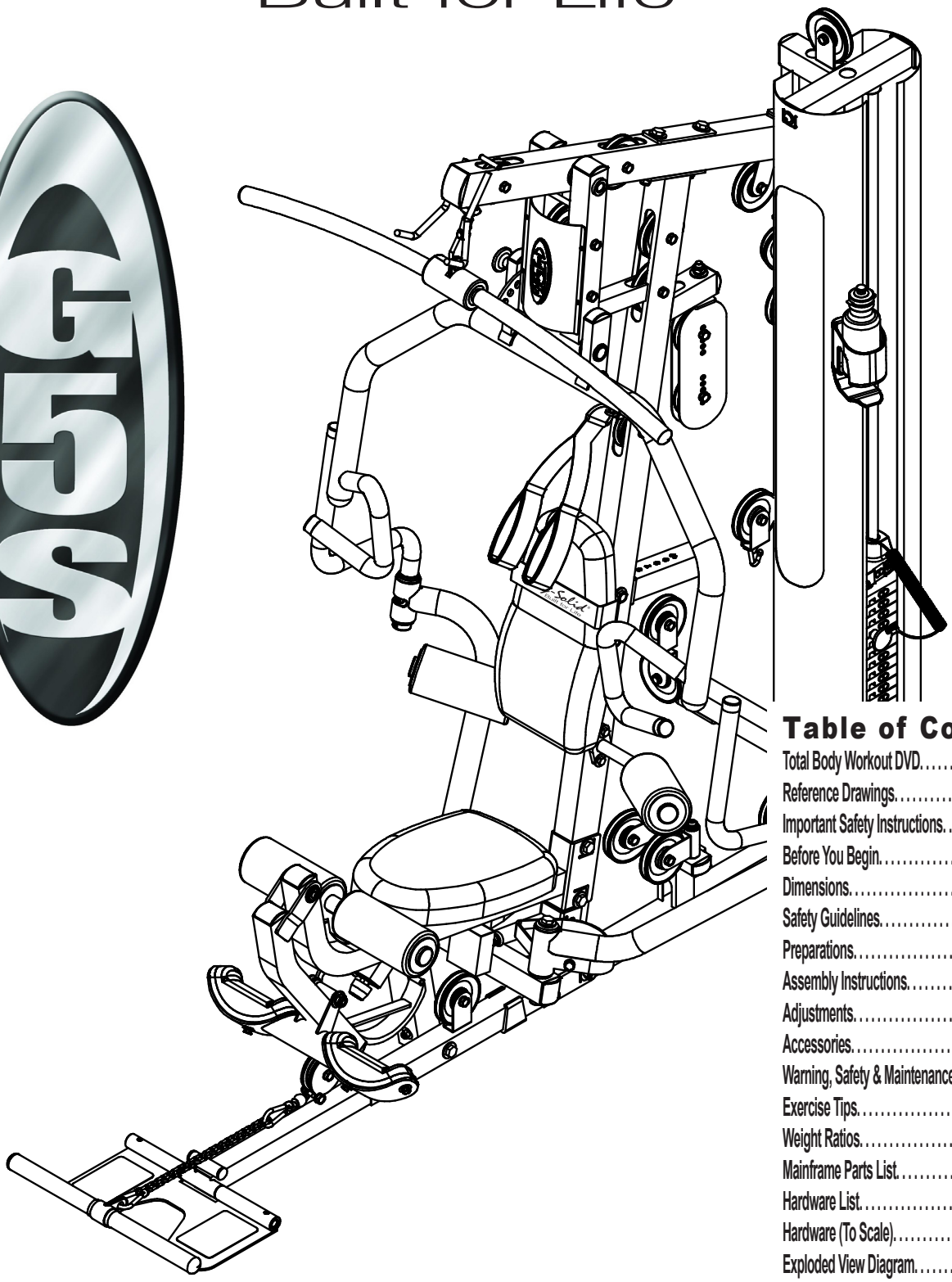

Table of Contents

Total Body Workout DVD	p. 2
Reference Drawings	p. 3
Important Safety Instructions	p. 4
Before You Begin	p. 5
Dimensions	p. 6
Safety Guidelines	p. 7
Preparations	p. 8
Assembly Instructions	p. 9-41
Adjustments	p. 42-45
Accessories	p. 46-47
Warning, Safety & Maintenance	p. 48-51
Exercise Tips	p. 52-74
Weight Ratios	p. 75
Mainframe Parts List	p. 76
Hardware List	p. 77-80
Hardware (To Scale)	p. 81-85
Exploded View Diagram	p. 86-87

Assembly & Instructions

OWNER'S MANUAL

v. 072010

Be sure that all users carefully read and understand all warning, safety and maintenance labels on the machine before each use. Failure to do so may result in death or serious injury.

It is imperative that you retain your Owner's Manual and be sure all warning labels are legible and intact. Replacement Owner's Manuals and warning labels are available from your local Body-Solid dealer.

If you have any questions about the operation, set up or maintenance of this machine please call our customer service department at 1 (800) 556-3113.

THERE IS A RISK ASSUMED BY INDIVIDUALS WHO USE THIS TYPE OF EQUIPMENT. TO MINIMIZE RISK, YOU MUST FOLLOW THESE RULES:

1. Inspect equipment before each workout. Check that all nuts, bolts, screws and pop pins are in place and fully tightened. Also, before use, check cables for signs of wear. Replace all worn parts immediately. Never use machine if any parts are damaged or missing. FAILURE TO FOLLOW THESE RULES MAY RESULT IN SERIOUS INJURY.
2. Keep clear of the cables and all moving parts when the machine is in use.
3. Always make sure all Snap Links are closed when doing any cable/pulley/strap exercises.
4. Exercise with care. Perform your exercises at a smooth moderate pace; never perform jerky or uncoordinated movements that may cause injury.
5. It is recommended that you should workout with a training partner.
6. Do not allow children or minors to play on or around this equipment.
7. If unsure of proper use of equipment, call your local Body-Solid distributor or the Body-Solid customer service department at 1-800-556-3113.
8. WARNING: Consult your physician before starting your exercise program. For your own safety, do not begin any exercise program without proper instruction. RAL8-6-03 WC-54

WARNING

Safety and Maintenance of Cables

IMPORTANT: Cables are wear items. It is your responsibility to prevent unexpected breakage. **Cable inspection should be performed daily.** Inspect all cables, the nylon coating on all cables, and the area near the fitting at each end of each cable. **Replace any damaged or worn cable immediately.** Do not allow the machine to be used until damaged or worn cables are replaced. Using or allowing a machine to be used with a suspect cable can result in serious injury. See Owner's Manual for more information.

For Body-Solid Customer Service
Call 1-800-556-3113

MAINTENANCE SCHEDULE

Check the function and integrity of the following components. As noted, Inspect equipment before each workout. Replace all damaged, broken or worn components immediately.

		DAILY	WEEKLY
Cables:	Check tension, end fittings, and coating	✓	
	Check that locking nut at weight stack is tight		✓
Upholstery:	Wipe down and dry	✓	
	Clean and condition		✓
Frame:	Wipe down and dry	✓	
	Polish / Wax		✓
Chrome:	Wipe down and dry	✓	
	Polish / Lubricate		✓
Nuts / Bolts / Fasteners: Tighten and / or adjust as needed			✓
Guide Rods: Lubricate and clean			✓
Linear Rods: Lubricate and clean			✓
Seat Sleeves: Lubricate and clean			✓
Adjustments / Locking Pins / Tightening Knobs			✓
Weight Stack Pins			✓
Warning Instruction Labels			✓
Springs / Pop Pins		✓	
Anti Skid Surfaces			✓
Hand Grips / Rollers			✓

For Body-Solid Customer Service
Call 1-800-556-3113
#MSSTKR0803

Total Body Workout DVD

Follow the lead of international fitness presenter Geoff Bagshaw as he guides you step by step through a total health and conditioning program. Includes thorough explanations and demonstrations of over 50 exercises targeting all major muscle groups. The Body-Solid Total Body Workout is a “must have” for anyone truly serious about in-home training.

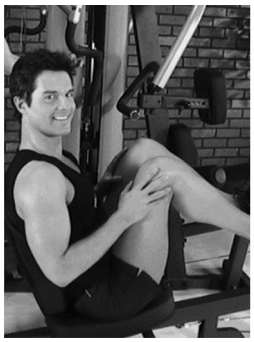

Also includes:

- Complete stretching routine
- Importance of cardio training
- Body-Solid company profile

Body-Solid®
Built for Life

Total Body Workout DVD

G 5 S
R e f e r e n c e D r a w i n g s

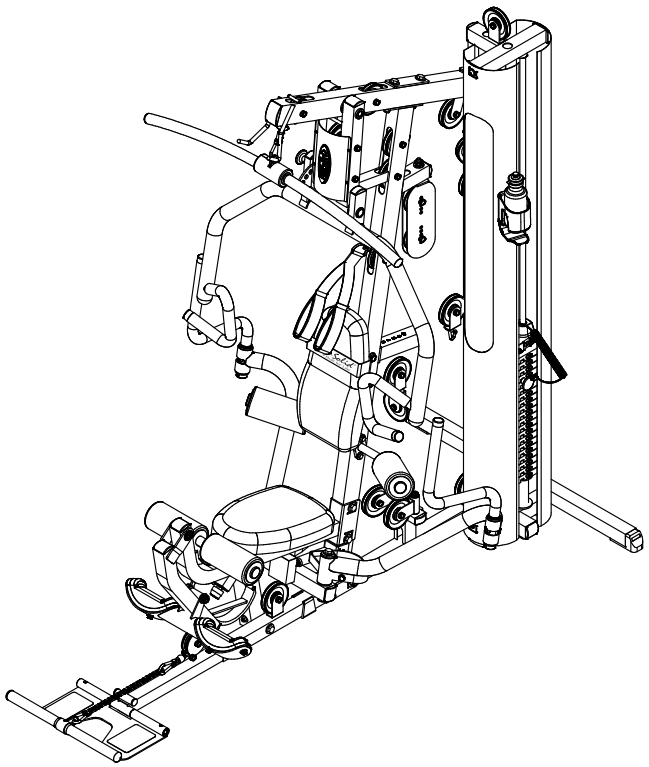

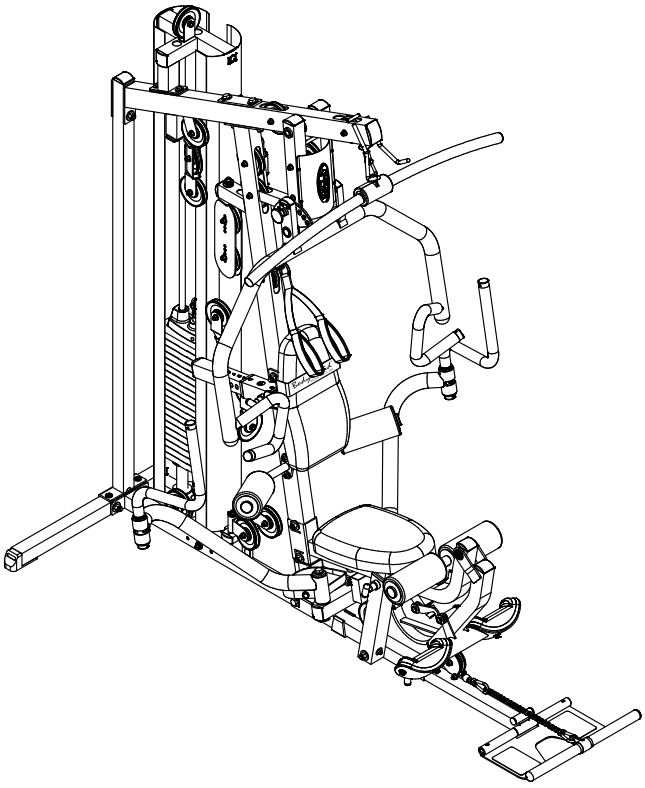

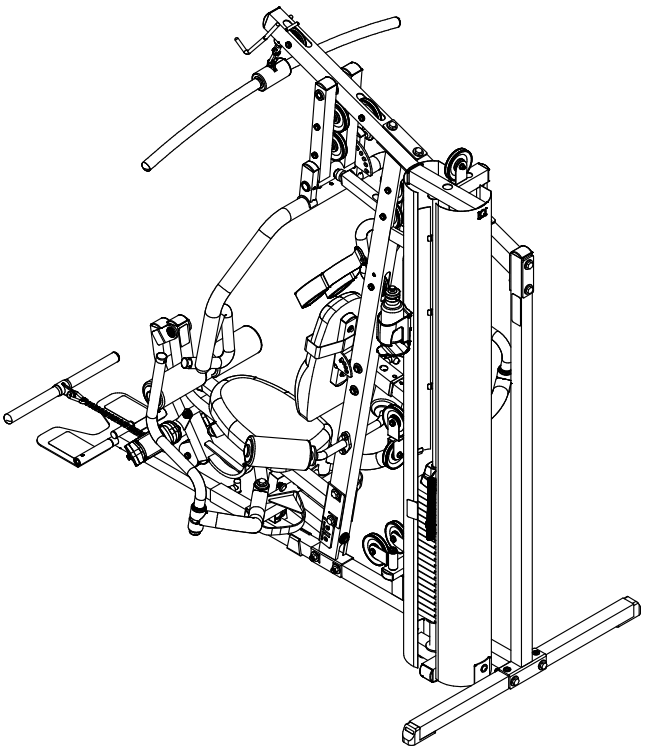

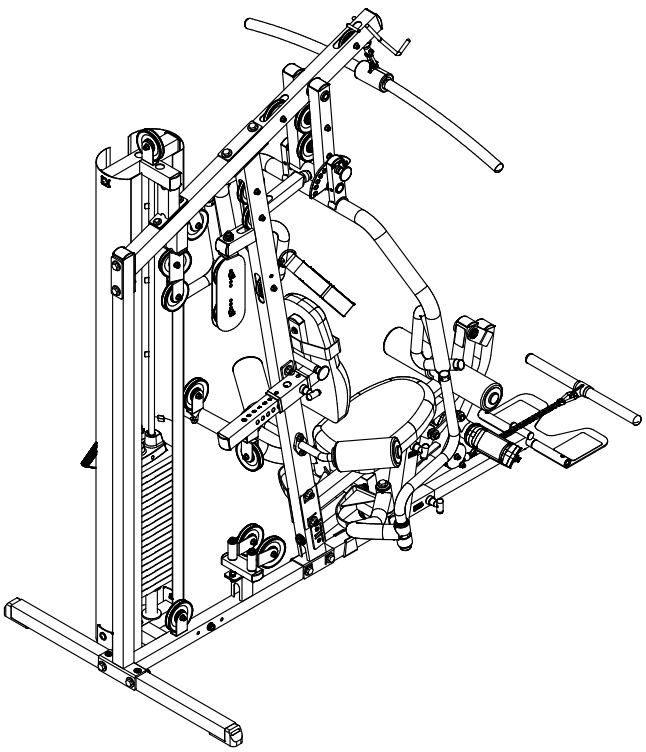

Note: Due to continuing product improvements, specifications and designs are subject to change without notice.

Even though we have prepared this manual with extreme care, neither the publisher nor the author can accept responsibility for any errors in, or omission from, the information given.

Important Safety Instructions

Before beginning any fitness program, you should obtain a complete physical examination from your physician.

Il est conseille de subir un examen medical complet avant d'entreprendre tout programme d'exercise.
Si vous avez des etourdissements ou des faiblesses, arretez les exercices immediatement.

Antes de comenzar cualquier programma de ejercicios, deberias tener un examen isico con su doctor.

When using exercise equipment, you should always take basic precautions, including the following:

- Read all instructions before using your machine. These instructions are written to ensure your safety and to protect the unit.
- **Do not remove any safety labels from the machine.**
- Do not allow children on or near the equipment.
- Use the equipment only for its intended purpose as described in this guide. Do not use accessory attachments that are not recommended by the manufacturer. Such attachments might cause injuries.
- Wear proper exercise clothing and shoes for your workout, no loose clothing.
- Keep hands, limbs, loose clothing, and long hair well out of the way of all moving parts.
- Use care when getting on or off the unit.
- Do not overexert yourself or work to exhaustion.
- If you feel any pain or abnormal symptoms, stop your workout immediately and consult your physician.
- Never operate unit when it has been dropped or damaged. Return the equipment to a service center for examination and repair.
- Never drop or insert objects into any opening in the equipment.
- **IMPORTANT:** Cables are wear items. It is your responsibility to prevent unexpected breakage. Cable inspection should be performed daily. Inspect all cables, and the area near the fitting at each end of each cable. Replace any damaged or worn cable immediately. Do not allow the machine to be used until these are replaced.
- Do not use the equipment outdoors or near water.

Personal Safety During Assembly

- Before beginning assembly, please take the time to read the instructions thoroughly.
- Read each step in the assembly instructions and follow the steps in sequence. Do not skip ahead. If you skip ahead, you may learn later that you have to disassemble components and that you may have damaged the equipment.
- Assemble and operate your machine on a solid, level surface. Locate the unit a few feet from the walls or furniture to provide easy access.

Your machine is designed for your enjoyment. By following these precautions and using common sense, you will have many safe and pleasurable hours of healthful exercise**.**

After assembly, you should check all functions to ensure correct operation. If you experience problems, first recheck the assembly instructions to locate any possible errors made during assembly. If you are unable to correct the problem, call the dealer from whom you purchased the machine or call **1-800-556-3113** for the dealer nearest you.

Obtaining Service

Please use your Owner's Manual to make sure that all parts have been included in your shipment. When ordering parts, you must use the part number and description from your Owner's Manual. Use only Body-Solid replacement parts when servicing this machine. Failure to do so will void your warranty and could result in personal injury.

For information about product operation or service, check out the official Body-Solid website at www.bodysolid.com or contact an authorized Body-Solid dealer or a Body-Solid factory-authorized service company or contact Body-Solid customer service at one of the following:

Toll Free: 1-800-556-3113
Phone: 1-708-427-3555
Fax: 1-708-427-3556
Hours: M-F 8:30-5:00 CST
E-Mail: service@bodysolid.com

Or write to:
Body-Solid, Inc.
Service Department
1900 S. Des Plaines Ave.
Forest Park, IL 60130 USA

Retain this Owner's Manual for future reference. If you need to order replacement parts please be prepared to provide the following information when contacting us so that we can assist you better.

1. Model Number
2. Proof of Purchase
3. Place of Purchase
4. Serial Number (S/N)
5. Part # and Description

Before You Begin

Thank you for purchasing the G5S. This gym is part of the Body-Solid line of quality strength training machines, which let you target specific muscle groups to achieve better muscle tone and overall body conditioning. To maximize your use of the equipment please study this Owner's Manual thoroughly.

Unpacking the Equipment

The G5S is carefully tested and inspected before shipment. Body-Solid ships the unit in several pieces that require assembly. Ask for assistance during the assembly process.

Carefully unpack the boxes and lay the pieces on the floor near the area where you plan to use the equipment.

Be careful to assemble all components in the sequence presented in this guide.

If any items are missing, contact the dealer from whom you purchased the unit or call 1-800-556-3113 for the dealer nearest you.

Body-Solid continually seeks ways to improve the performance, specifications and product manuals in order to ensure that only superior products are released from our factories. Please take the time to carefully read through this manual thoroughly. Instructions contained in this document are not intended to cover all details or variations possible with Body-Solid equipment, or to cover every contingency that may be met in conjunction with installation, operation, maintenance or troubleshooting of the equipment. Even though we have prepared this manual with extreme care, neither the publisher nor the author can accept responsibility for any errors in, or omission from, the information given. Should additional information be required, or should situations arise that are not covered by this manual, the matter should be directed to your local Body-Solid representative, or the Service Department at Body-Solid Inc. in Forest Park, Illinois.

Any Questions?
Call (800) 556-3113

Dimensions

The room layout diagram below will help you decide the best placement for your G5S.

The dimensions of the G5S are: Width 3' 10" X Length 6'11".

The ceiling height requirement for the G5S is 7'.

The usage space is: Width 6' X Length 11' (The usage space is the overall space needed for operation).

The usage space needed for the G5S could be more, depending on the user. Allow enough room for the Low Row Station.

Minimum Usage Space

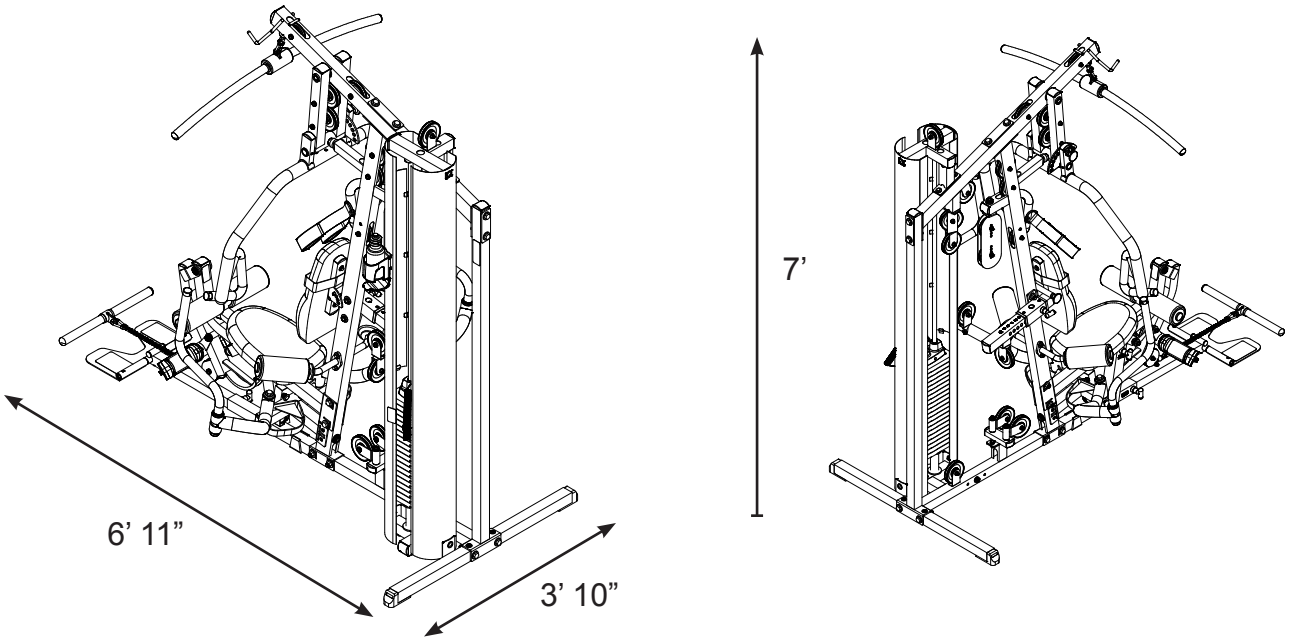

Suggested Usage Space

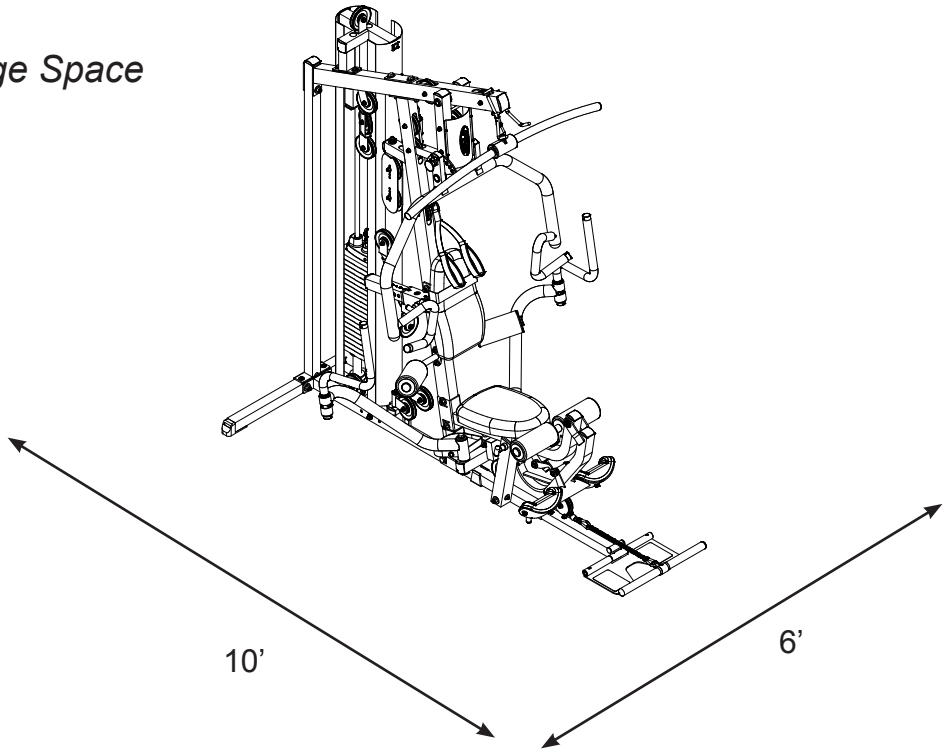

Safety Guidelines

Successful resistance training programs have one prominent feature in common... safety. Resistance training has some inherent dangers, as do all physical activities. The chance of injury can be greatly reduced or completely removed by using correct lifting techniques, proper breathing, maintaining equipment in good working condition, and by wearing the appropriate clothing.

- **It is highly recommended that you consult your physician before beginning any exercise program. This is especially important for individuals over the age of 35, or persons with pre-existing health problems.**

- **Always warm up before starting a workout. Try to do a total body warm up before you start. It is especially important to warm up the specific muscle groups you are going to be using. This can be as simple as performing a warm up set of high repetitions and light weight for each exercise.**

- **Use proper form. Focus on only working the muscle groups intended for the exercise you are doing. If there is strain elsewhere, you may need to re-evaluate the amount of weight that is involved with the lift. Keeping proper form also includes maintaining control through an entire range of motion.**

- **Breath properly. Inhale during the eccentric phase of the exercise, and exhale during the lifting, or concentric phase. Never hold your breath during any part of an exercise.**

- **Always wear the appropriate clothing and shoes when exercising. Wearing comfortable athletic shoes with good support and loose fitting, breathable clothing will reduce the risk of injury.**

- **Maintaining equipment in proper operating condition is of utmost importance for a safe resistance training program. Pulleys and cables should be checked for wear frequently and replaced as needed. Equipment should be lubricated as indicated by the manufacturer.**

- **Read and study all warning labels on this machine. It is absolutely necessary that you familiarize yourself and all others with the proper operation of this machine prior to use.**

- **Keep hands, limbs, loose clothing and long hair well out of the way of all moving parts.**

- **Do not attempt to lift more weight than you can control safely.**

- **Inspect the machine daily for loose or worn parts. If a problem is found do not allow the machine to be used until all parts are tightened or worn or defective parts are repaired or replaced.**

Preparations

CAUTION: To set up this unit, you will need assistance. Do not attempt assembly by yourself.

You must review and follow the instructions in this Owner's Manual. If you do not assemble and use the G5S according to these guidelines, you could void the Body-Solid warranty.

Required Tools

The basic tools that you must obtain before assembling the G5S include but are not limited to:

- Metric Allen Key Set
- Standard Allen Key Set
- Standard Wrench Set
- Metric Wrench Set
- Adjustable Wrench
- Screwdriver (standard and/or phillips)
- Rubber Mallet
- Silicone Spray Oil

Installation Requirements

Follow these installation requirements when assembling the G5S:

Set up the G5S on a solid, flat surface. A smooth, flat surface under the machine helps keep it level. A level machine has fewer malfunctions.

Provide ample space around the machine. Open space around the machine allows for easier access.

Insert all bolts in the same direction. For aesthetic purposes, insert all bolts in the same direction unless specified (in text or illustrations) to do otherwise.

Leave room for adjustments. Tighten fasteners such as bolts, nuts, and screws so the unit is stable, but leave room for adjustments. Do not fully tighten fasteners until instructed in the assembly steps to do so.

Fill out and mail the warranty card.

CAUTION: Obtain assistance! Do not attempt to assemble the G5S by yourself. Review the Installation Requirements before proceeding with the following steps.

The G5S unit comes in seven boxes. Be careful to assemble components in the sequence presented in this guide.

NOTE: With so many assembled parts, proper alignment and adjustment is critical. While tightening the nuts and bolts, be sure to leave room for adjustments.

Assembly Instructions

Assembly of the G5S takes professional installers about 3 hours to complete. If this is the first time you have assembled this type of equipment, plan on significantly more time.

Professional installers are highly recommended!

However, if you acquire the appropriate tools, obtain assistance, and follow the assembly steps sequentially, the process will take time, but is fairly easy.

Assembly Tips

Read all "Notes" on each page before beginning each step.

While you may be able to assemble the G5S using the illustrations only, important safety notes and other tips are included in the text.

Some pieces may have extra holes that you will not use. Use only those holes indicated in the instructions and illustrations.

NOTE: To find out the length of a particular bolt, measure its shank (the long, narrow part beneath the head). Refer to the following diagram:

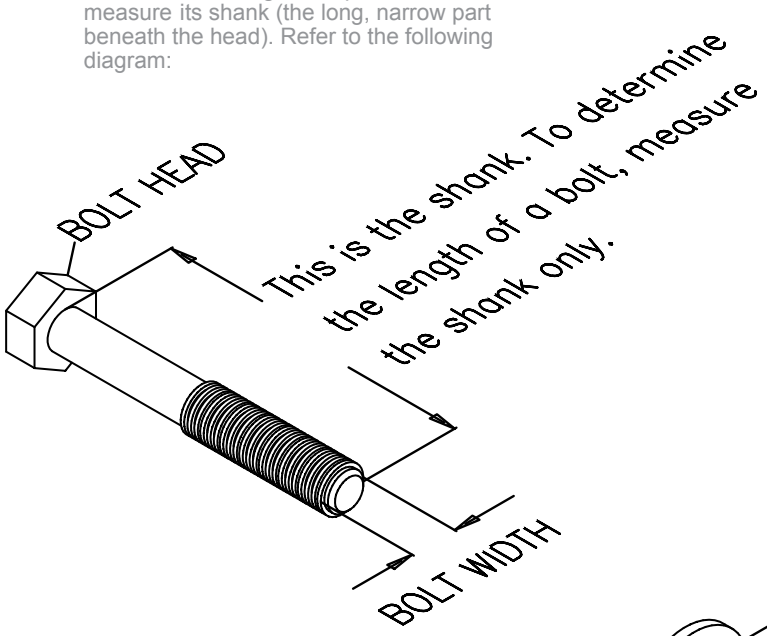

Do not fully tighten bolts until instructed to do so.

Note: **After assembly, you should check all functions to ensure correct operation. If you experience problems, first recheck the assembly instructions to locate any possible errors made during assembly. If you are unable to correct the problem, call the dealer from whom you purchased the machine or call 1-800-556-3113 for the dealer nearest you.**

IMPORTANT!

Before you begin you should look at the quick reference guide that shows all hardware parts (in actual size) along with the corresponding part numbers on the assembly instructions.

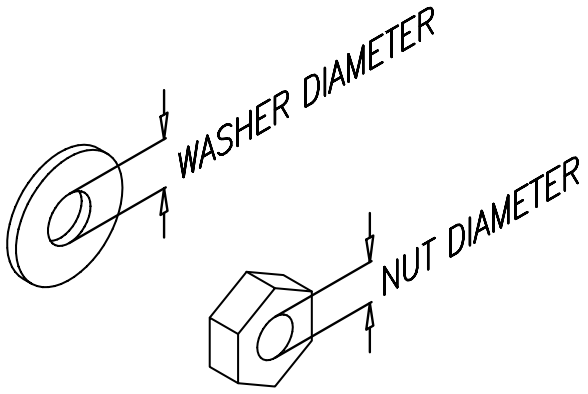

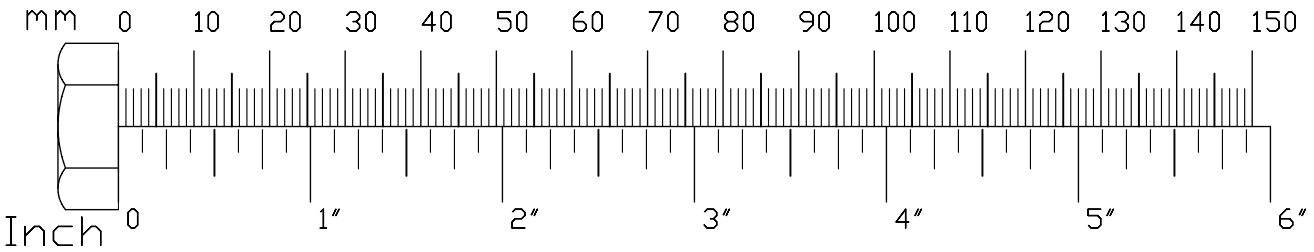

STEP 1

Be careful to assemble all components in the sequence they are presented.

NOTE: Finger tighten all hardware in this step.
Do Not wrench tighten until end of Step 7.

A. Insert two Foot Caps (9) into the ends of Rear Base Frame (B).

B. Insert Convex End Cap (3) to the top of Rear Vertical Frame (C).

C. Insert three Weight Stack Shim (20) to Main Base Frame (A).

D. Connect Frame Leveler (87) to Main Base Frame (A).

E. Insert Convex End Cap (3) to the side of Main Base Frame (A) as shown.

F. Attach Main Base Frame (A) to Rear Base Frame (B) and Rear Vertical Frame (C) using:
Two 43 (M12x80 hex head bolt)
Four 57 (M12 washer)
Two 55 (M12 nylon lock nut)
Two 104 (M8x20 round allen head)
Two 105 (M8 washer)

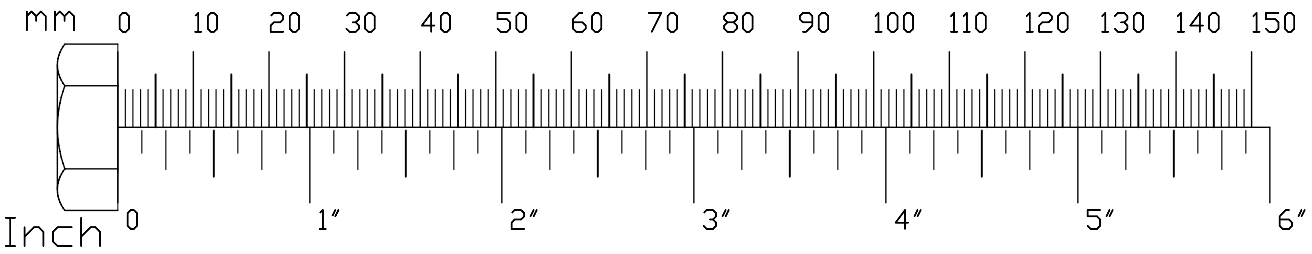

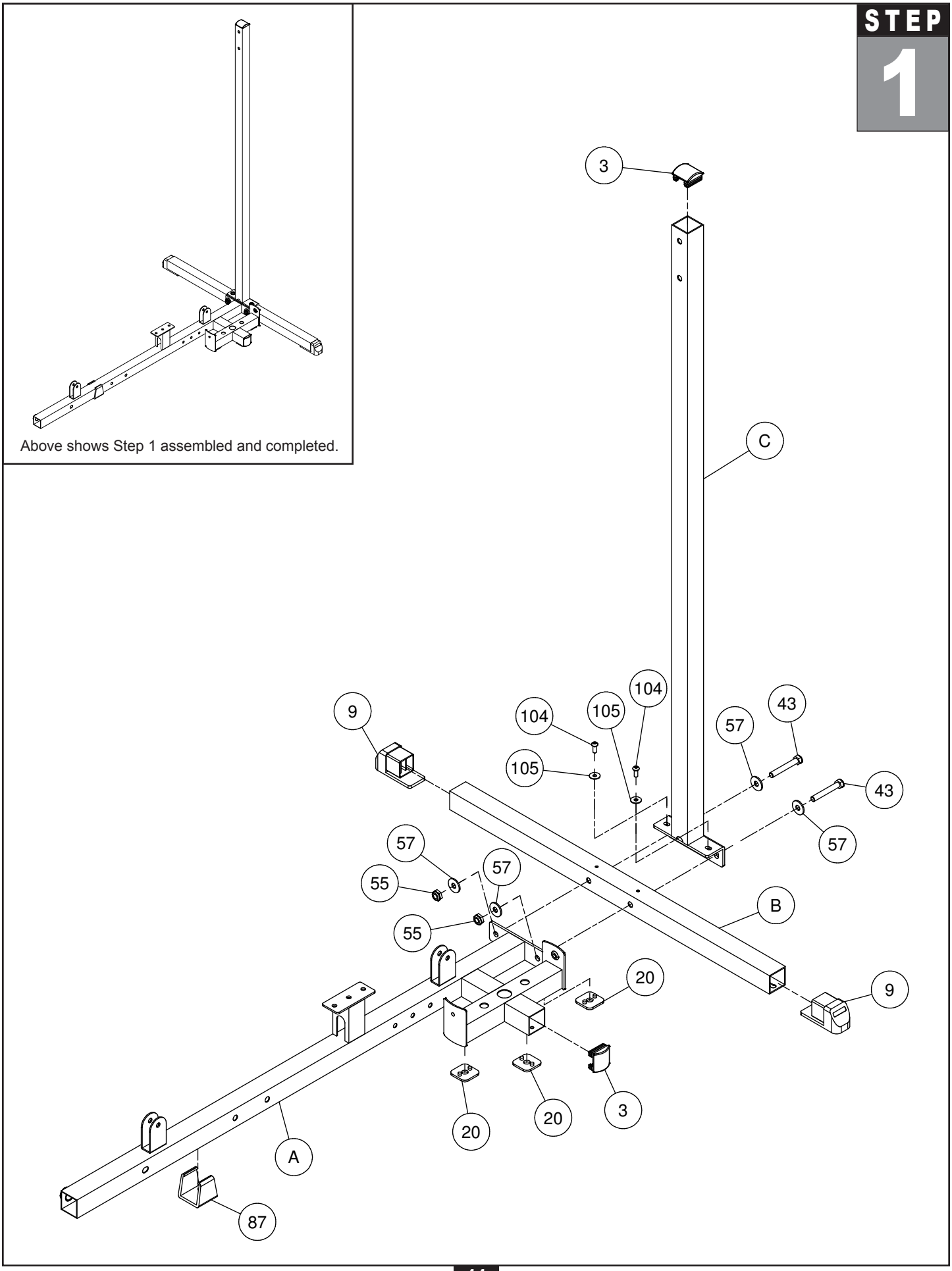

Above shows Step 1 assembled and completed.

STEP 2

Be careful to assemble all components in the sequence they are presented.

NOTE: Finger tighten all hardware in this step.
Do not wrench tighten until end of Step 7.

A. Attach Angled Support Frame (E) to Main Base Frame (A) using:
Two 43 (M12x80 hex head bolt)
Four 57 (M12 washer)
Two 55 (M12 nylon lock nut)

B. Insert Convex End Cap (4) to the front of the Top Frame (F).

C. Attach Top Frame (F) and Plate (86) to the Rear Vertical Frame (C) using:
Two 43 (M12x80 hex head bolt)*
Three 57 (M12 washer)
One 55 (M12 nylon lock nut)

*NOTE: The upper Hex Head Bolt (43) goes into an internally threaded nut inside Top Frame (F).

D. Attach Top Frame (F) and Plate (92) to Angled Support Frame (E) using:
Two 41 (M12x105 hex head bolt)
Four 57 (M12 washer)
Two 55 (M12 nylon lock nut)

E. Attach Pec Dec Frame (G) to Angled Support Frame (E) as shown using:
One 52 (M12x90 hex head bolt)
Two 43 (M12x80 hex head bolt)
Five 57 (M12 washer)
Two 55 (M12 nylon lock nut)

F. Attach two Curved End Caps (3) and one Flat End Cap (8) to Pec Dec Frame (G) as shown.

G. Attach one Curved End Cap (3) to Angled Support Frame (E) as shown.

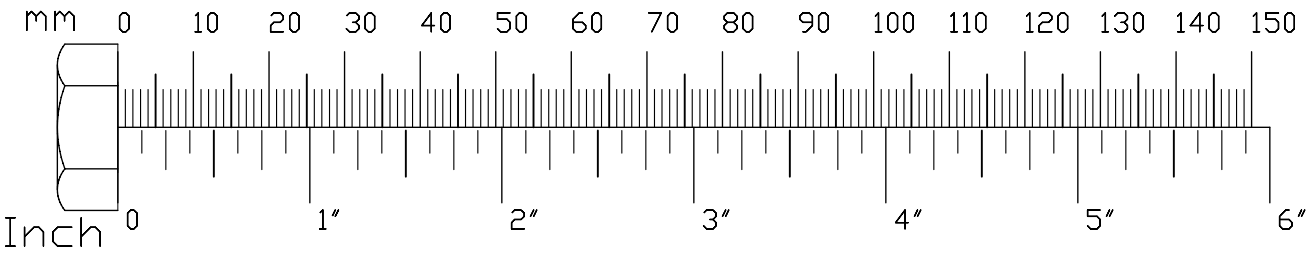

STEP 2

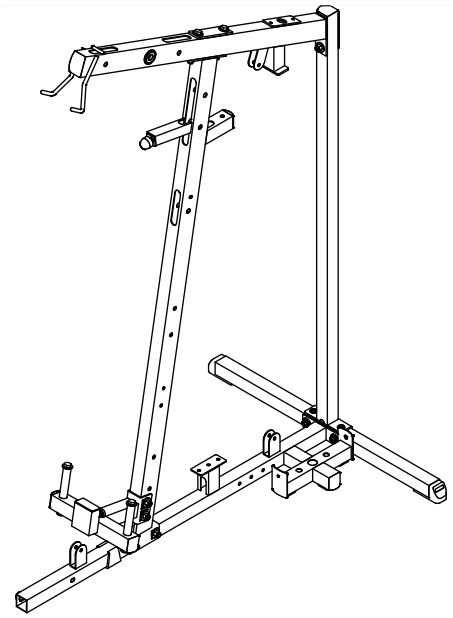

Above shows Step 2 assembled and completed.

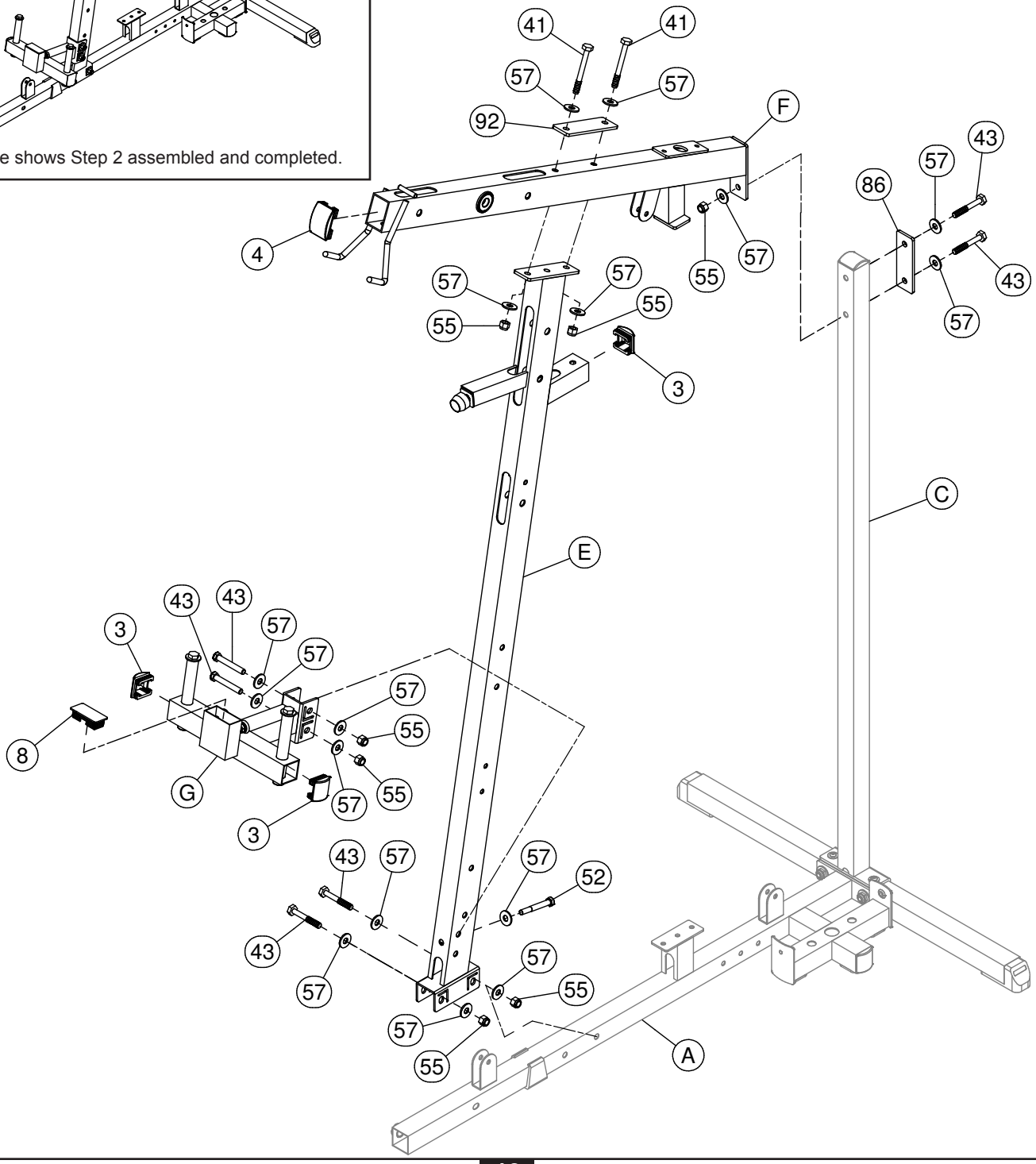

STEP 3

Be careful to assemble all components in the sequence they are presented.

NOTE: Finger tighten all hardware in this step.
Do not wrench tighten until end of Step 7.

A. Above the Pec Dec Frame (G) connect the Leg Extension Frame (H) to Angled Support Frame (E) using:
Two 43 (M12x80 hex head bolt)
Four 57 (M12 washer)
Two 55 (M12 nylon lock nut)

B. Attach the Leg Extension Frame (H) to Main Base Frame (A) using:
One 40 (M12x125 hex head bolt)
Two 57 (M12 washer)
One 55 (M12 nylon lock nut)

C. Attach Left Pec Dec Arm (J) to Pec Dec Frame (G) using:
One 117 (38OD sheet copper)
One 45 (M12x20 hex head bolt)
One 57 (M12 washer)

D. Remove Chrome Collar (35) from Left Pec Dec Handle (K) by loosening M8x8 Allen Screw (27).

E. Attach Left Pec Dec Handle (K) to Left Pec Dec Arm (J) using:
One 64 (M8x20 round allen head bolt)
One 115 (M8 spring lock washer)

F. Connect Chrome Collar (35) to Left Pec Dec Handle (K) and tighten M8x8 Allen Screw (27).

G. Remove Chrome Collar (35) from Right Pec Dec Arm (L) by loosening M8x8 Allen Screw (27).

H. Attach Right Pec Dec Arm (L) to Pec Dec Frame (G) using:
One 117 (38OD sheet copper)
One 45 (M12x20 hex head bolt)
One 57 (M12 washer)

I. Connect Chrome Collar (35) to Right Pec Dec Arm (L) and tighten M8x8 Allen Screw (27).

J. Attach Right Pec Dec Handle (M) to Right Pec Dec Arm (L):
One 64 (M8x20 hex head bolt)
One 115 (M8 spring lock washer)

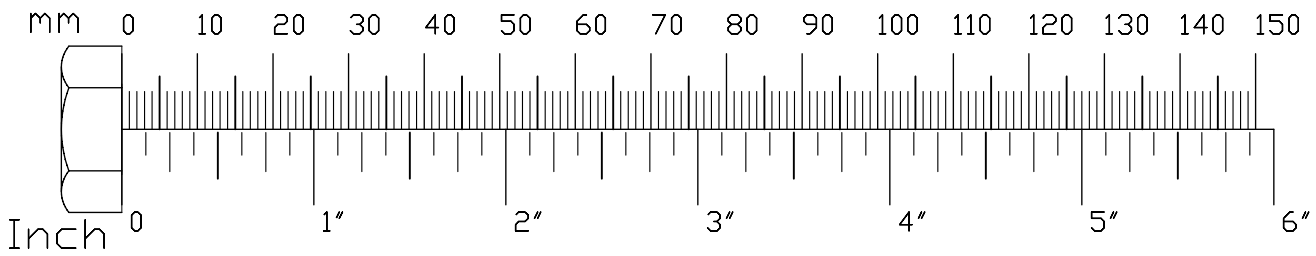

STEP 3

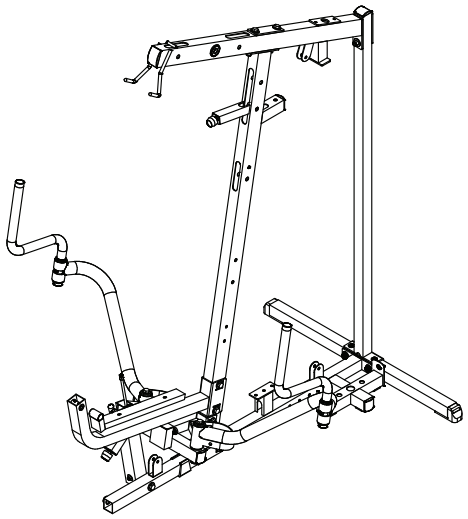

Above shows Step 3 assembled and completed.

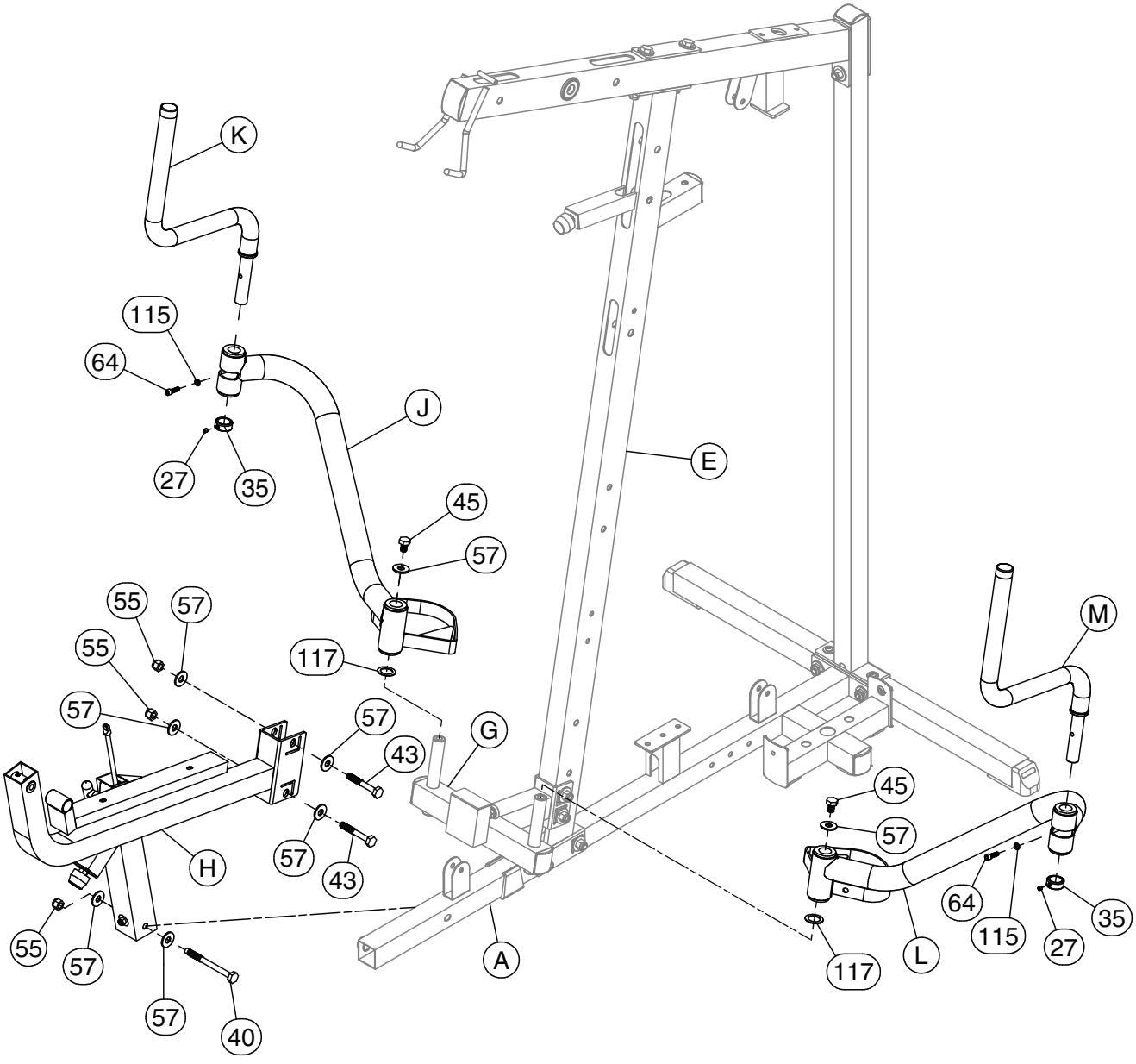

STEP 4

Be careful to assemble all components in the sequence they are presented.

NOTE: Finger tighten all hardware in this step.
Do not wrench tighten until end of Step 7.

A. Connect Seated Press Arm Support (N) to Top Frame (F) using Shaft (73) then secure the assembly by tightening Allen Screws (27).

B. Insert two Convex End Caps (3) to the top of Seated Press Arm Support (N).

C. Connect Seated Press Arm (P) to Seated Press Arm Support (N) using Shaft (74) then secure the assembly by tightening Allen Screws (27). Make sure Pop Pin (84) in Seated Press Arm (P) is fully engaged into any selector hole in Seated Press Arm Support (N).

D. Insert two 1” X 2” Convex End Caps (6) to the top of the Seated Press Arm (P), and attach two Round End Cap (110) to the bottom of it.

E. Attach Foot Plate (R) to Adjustable Chrome Frame (S) with Shaft (76) then secure the assembly by tightening Allen Screws (27).

F. Slide Adjustable Chrome Frame (S) into Main Base Frame (A) and hold in place with T-Shaped Pop Pin (26).

G. Insert two Round End Caps (7) into the openings on the top of the Adjustable Chrome Frame (S) as shown.

H. Attach two Rubber Pads (14) to the top of Foot Plate (R) and two Rubber Pads (14) to the bottom of Foot Plate (R) as shown.

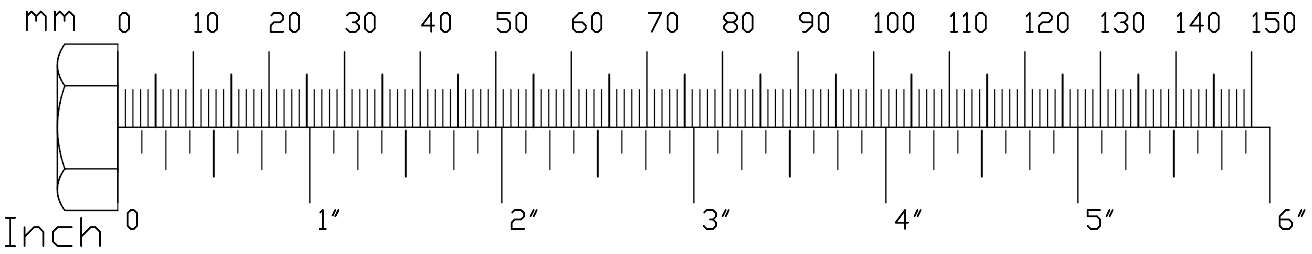

STEP 4

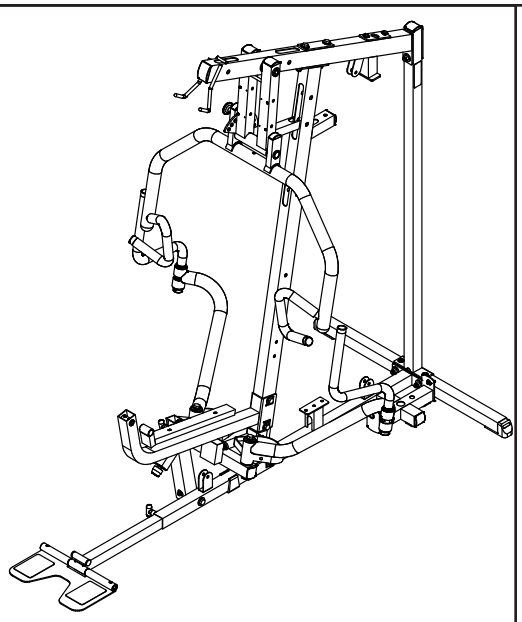

Above shows Step 4 assembled and completed.

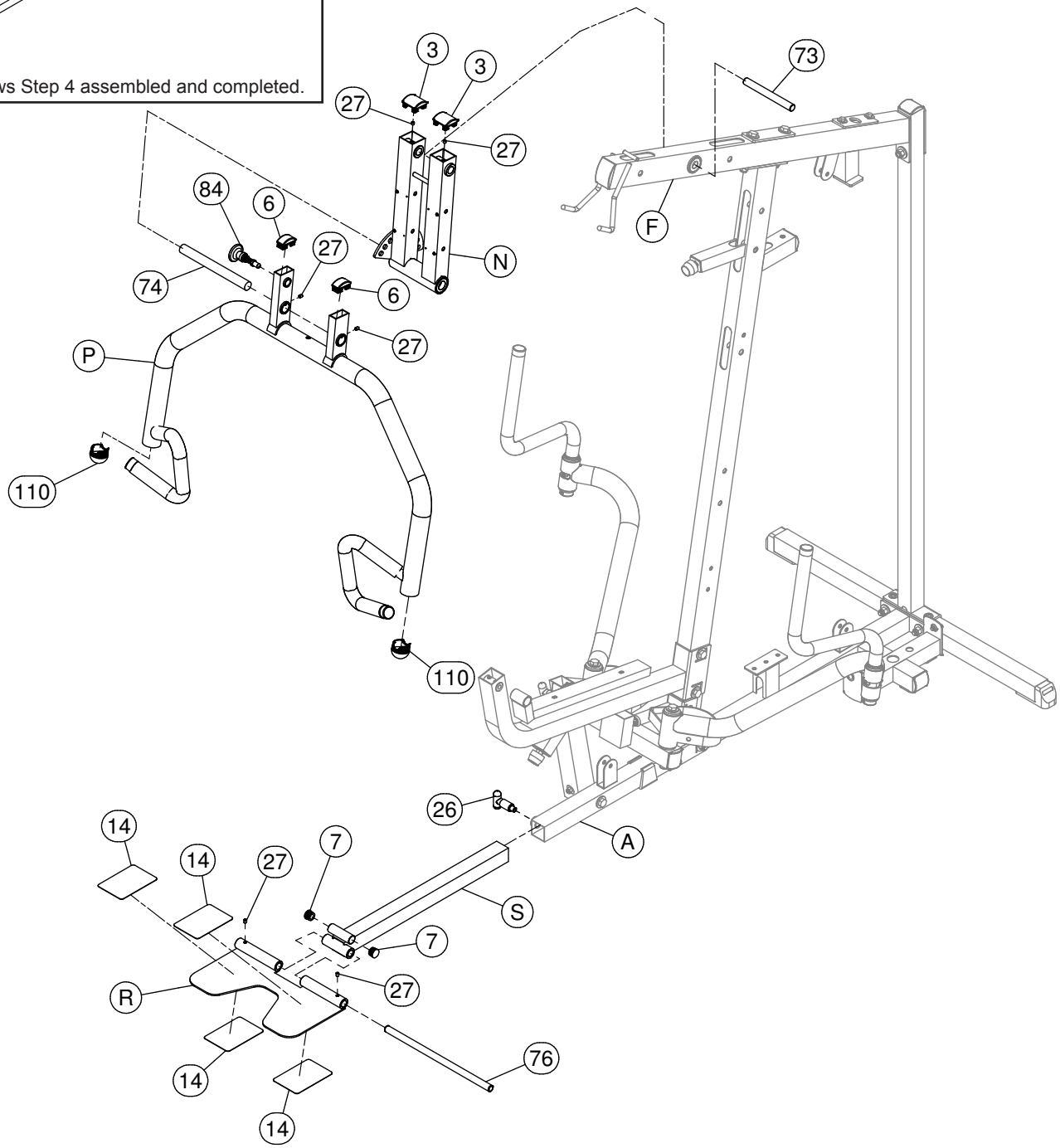

STEP

5

Be careful to assemble all components in the sequence they are presented.

NOTE: Finger tighten all hardware in this step.
Do not wrench tighten until end of Step 7.

A. Slide two Plastic Bushings (78) into Back Pad Holder (T) as shown.

B. Attach Back Pad Holder (T) to Angled Support Frame (E) using:
Two 43 (M12x80 hex head bolt)
Four 57 (M12 washer)
Two 55 (M12 nylon lock nut)

C. Slide Convex End Cap (3) into Chrome Back Pad Frame (U) as shown.

D. Slide Chrome Back Pad Frame (U) into Back Pad Holder (T) and hold in place with T-Shaped Pop Pin (26).

E. Insert two 1" X 2" Convex End Caps (6) into Back Pad Frame (V) as shown.

F. Attach Back Pad Frame (V) to Chrome Back Pad Frame (U) as shown with T-Shaped Pop Pin (85) using:
One 62 (M10x16 allen bolt)
One 109 (M10 x Ø19 washer)

G. Attach Left Leg Hold Down (W) and Right Leg Hold Down (AF) to the Angled Support Frame (E) using:
Two 53 (M10x80 hex head bolt)
Four 58 (M10 washer)
Two 56 (M10 nylon lock nut)

H. Attach two Foam Rollers (17) and two Plastic Washers (21) onto Left Leg Hold Down (W) and Right Leg Hold Down (AF) and hold in place with two round End Caps (106) as shown.

I. Attach Back Pad (X) to Back Pad Frame (V) using:
Two 51 (5⁄16" x 1 3⁄4" hex head bolt)
Two 60 (5⁄16" spring lock washer)
Two 59 (5⁄16" washer)

J. Insert Flat Allen Head Bolt (64) and Spring Washer (115) into Chrome Back Pad Frame (U), this will help hold the Chrome Back Pad Frame (U) in place.

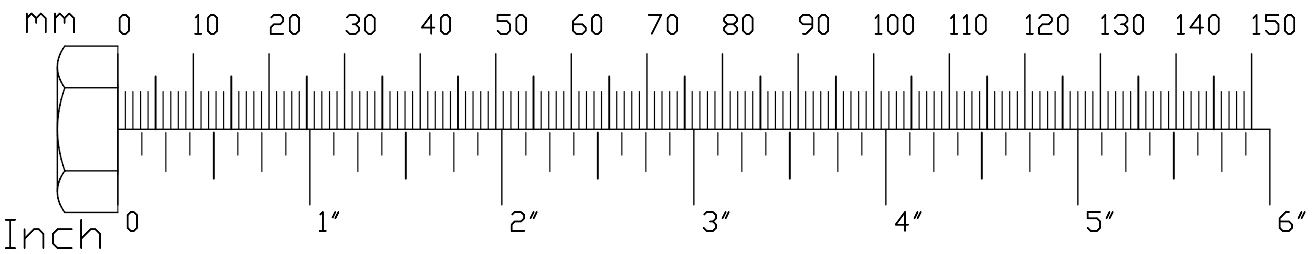

STEP 5

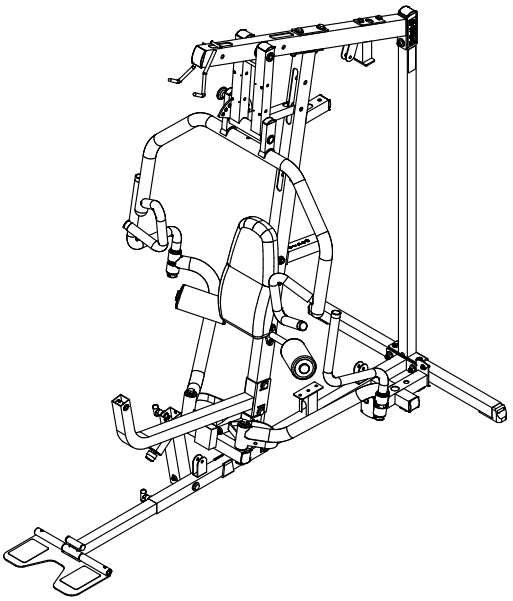

Above shows Step 5 assembled and completed.

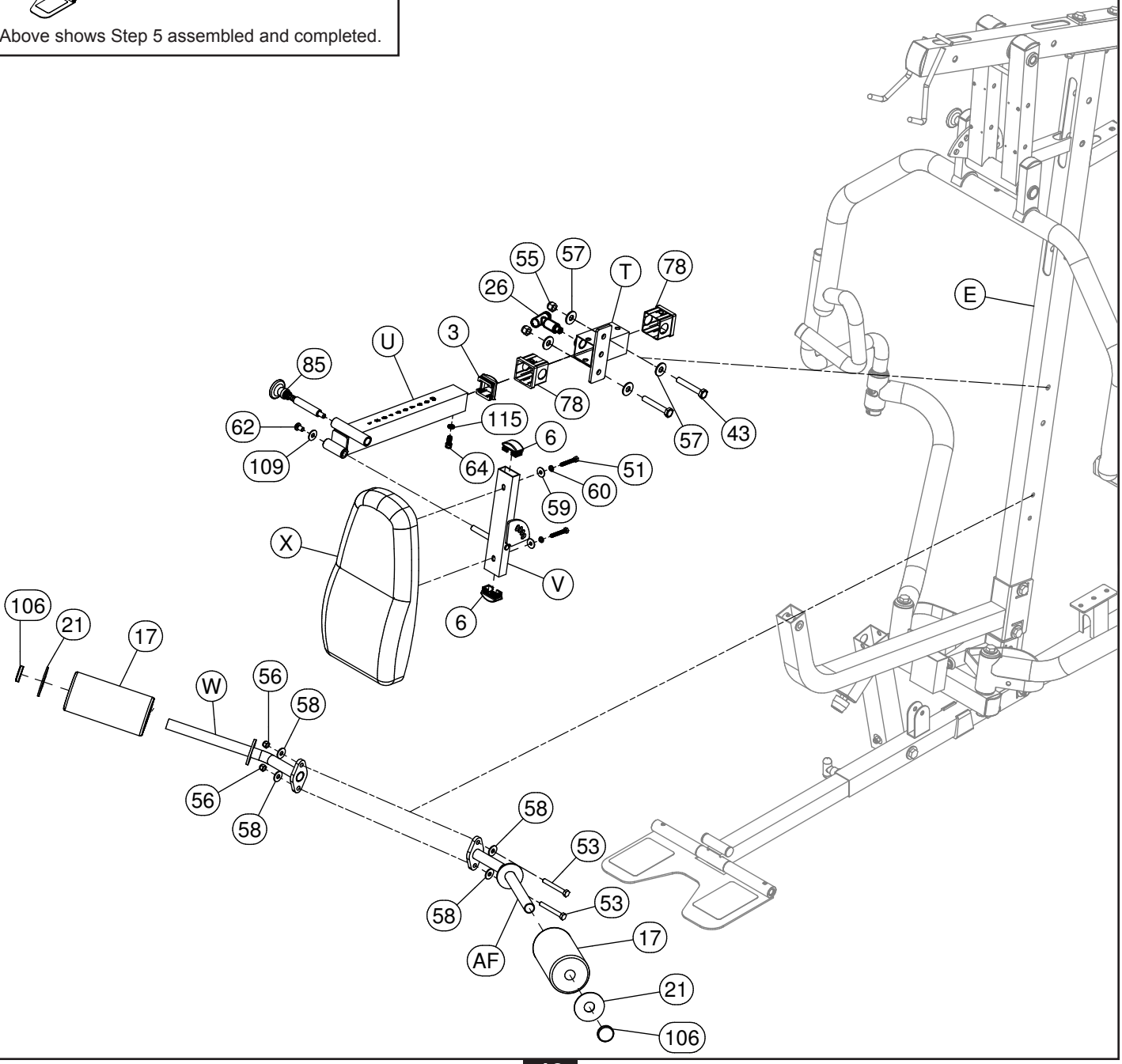

STEP 6

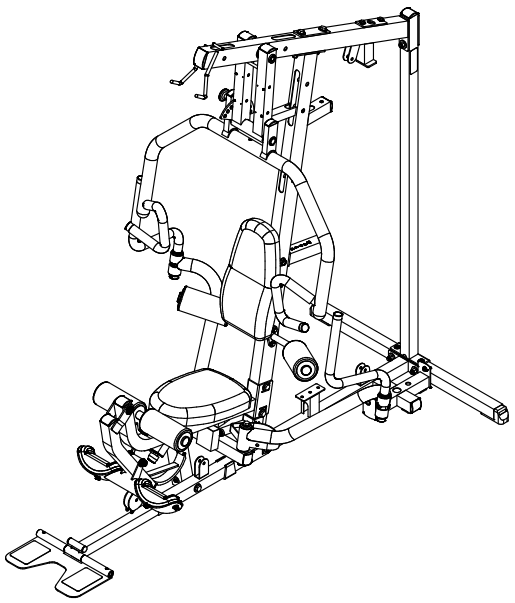

Above shows Step 6 assembled and completed.

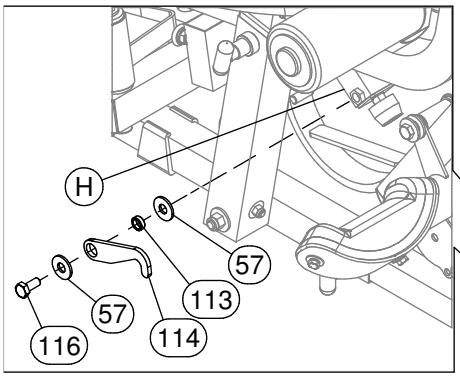

Hook Assembly

STEP 6

Be careful to assemble all components in the sequence they are presented.

NOTE: Finger tighten all hardware in this step.
Do not wrench tighten until end of Step 7.
Some components may be pre-installed.

A. Attach one Convex End Cap (3) to the top and one Convex End Cap (3) to the bottom of Leg Extension Arm (Y).

B. Attach Leg Extension Arm (Y) to Leg Extension Frame (H) using pre-installed Shaft (77) as shown. Tighten the two Allen Screws (27) to lock down Shaft (77) in Leg Extension Frame (H), then secure the assembly using:
Two 65 (M8x15 allen head bolt)
Two 121 (M8 washer)

C. Attach Convex End Cap (3) to the front of Leg Extension Frame (H) as shown.

D. Attach Leg Extension Pad Holder (Z) to Leg Extension Arm (Y) using:
One 42 (M12x95 hex head bolt)
Three 57 (M12 washer)
One 55 (M12 nylon lock nut)
One 112 (¾" x 8mm spacer sleeve)

E. Attach the two Leg Pads (ZA) to Leg Extension Pad Holder (Z) using:
Four 94 (5/16" x 3/4" hex head bolt)
Four 60 (5/16" spring lock washer)
Four 59 (5/16" washer)

F. Attach two 1" X 2" Curved End Caps (6) to the front and back of the Leg Extension Seat Pad Frame (ZC) as shown.

G. Attach Leg Extension Seat Pad (ZB) to Leg Extension Seat Pad Frame (ZC) using:
Two 51 (5/16" x 1 ¾" hex head bolt)
Two 60 (5/16" spring lock washer)
Two 59 (5/16" washer)

H. Slide Plastic Bushing (79) into Leg Extension Frame (H) as shown.

I. Attach Hydraulic Seat Adjuster (88) to the inside bottom of the seat tube in Leg Extension Frame (H) using:
One 47 (M10x75 hex head bolt)
Two 58 (M10 washer)
One 56 (M10 nylon lock nut)

J. Slide Leg Extension Seat Pad Frame (ZC) into Plastic Bushing (79) in Leg Extension Frame (H) and attach to the top of Hydraulic Seat Adjuster (88) using:
One 48 (M10x60 hex head bolt)
Two 109 (M10 washer Ø19)
One 56 (M10 nylon lock nut)

K. Insert T-Shaped Pop Pin (26) into the threaded opening in the Leg Extension Frame (H).

L. Attach the low pulley lock-down system to Leg Extension Frame (H) by assembling Hook (114) as shown using:
One 116 (M12X25 hex head bolt)
Two 57 (M12 washer)
One 114 (Hook)
One 113 (Spacer)

M. Slide Foam Roller Bar (75) through Seat Pad Frame (ZC).

N. Slide one Plastic Washer (21), one Foam Roller (17), one Plastic Washer (21) and one Roller End Cap (106) onto both sides of Foam Roller Bar (75).

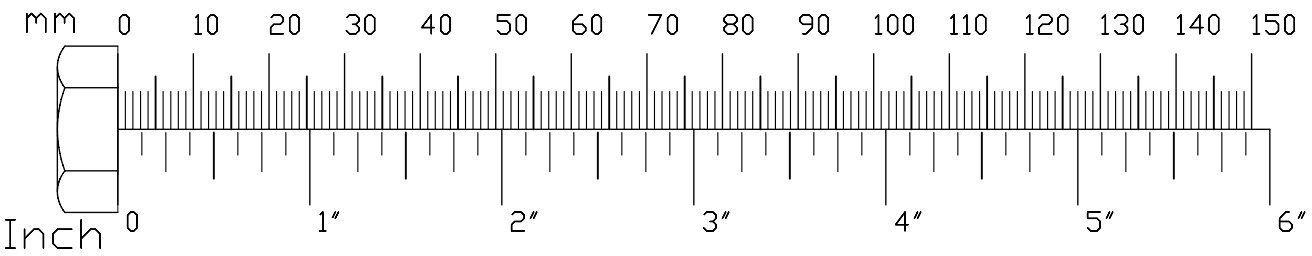

STEP 7

Be careful to assemble all components in the sequence they are presented.

NOTE: Finger tighten all hardware in this step.
Do not wrench tighten until end of Step 7.

A. Place two Weight Stack Risers (89) and two Rubber Donuts (10) onto Main Base Frame (A) as shown.

NOTE: Use Weight Stack Risers (89) if you have a 210 lb weight stack.
If you have a 260 lb weight stack you will not need Weight Stack Risers (89).

B. Slide two Guide Rods (AA) through Rubber Donuts (10), Weight Stack Risers (89) then into Main Base Frame (A).

C. Slide Weight Stack Plates (25) onto Guide Rods (AA). Make sure the opening in each Weight Stack Plate (25) is facing outward as shown.

NOTE: Use twenty 10 lb plates for a 210 lb weight stack.
Use twenty-five 10 lb plates for a 260 lb weight stack.

D. Connect Top Plate (18) to the Selector Rod (19) using:
One 61 (⅜" X 2" round allen head)
One 118 (⅜" spring washer)

E. Slide Top Plate (18) and Selector Rod (19) onto Guide Rods (AA).

F. Slide two Shaft Collars (24) onto the two Guide Rods (AA) as shown.

G. Insert Guide Rods (AA) into Top Weight Stack Frame (AB), and attach Top Weight Stack Frame (AB) to Top Frame (F) using:
Two 44 (M10 x 20 hex head bolt)
Two 58 (M10 washer)

H. Attach Curved End Cap (3) to Top Weight Stack Frame (AB) as shown.

I. Slide Shaft Collars (24) up into the Top Weight Stack Frame (AB) and turn the Shaft Collar, so the Shaft Collars (24) lock onto the Top Weight Stack Frame (AB).
Tighten each Allen Screw (27) in Shaft Collars (24).

K. Apply Weight Stack Numbers (128) as shown in the diagram starting at Top Plate (18).

L. Connect Weight Stack Pin (1) to Weight Stack Pin Lanyard (111) then insert into any one of the Weight Stack Plates (25).

NOTE: Now you may wrench tighten *all* hardware on the unit.

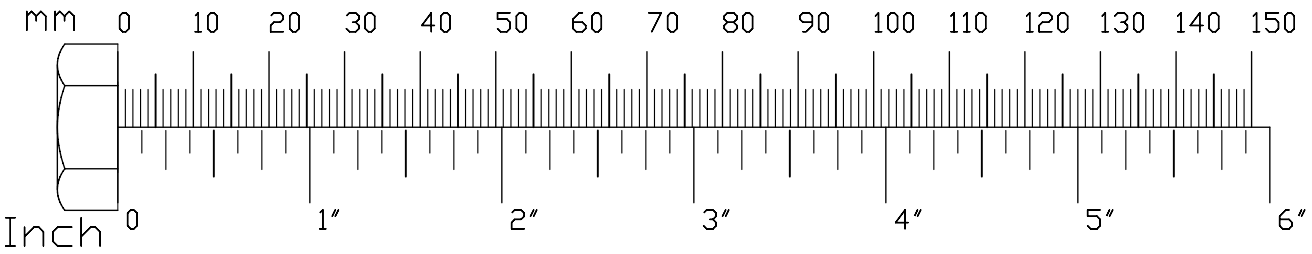

STEP 7

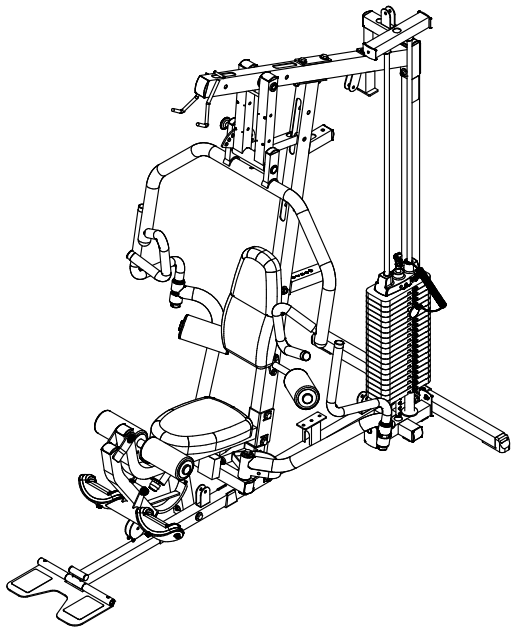

Above shows Step 7 assembled and completed.

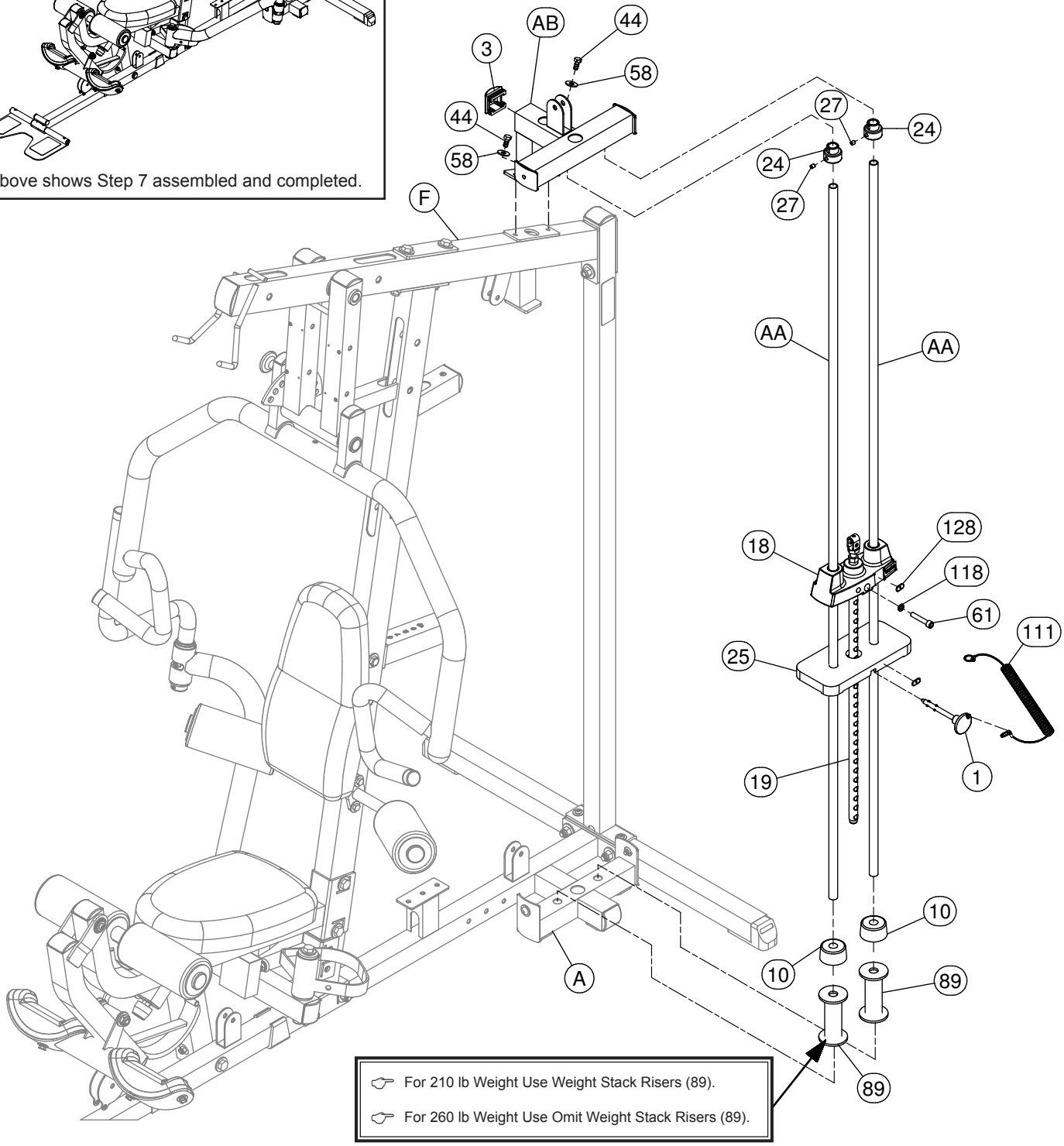

For 210 lb Weight Use Weight Stack Risers (89).

For 260 lb Weight Use Omit Weight Stack Risers (89).

STEP

8

Be careful to assemble all components in the sequence they are presented.

NOTE: All Pulleys in this step are 4 ¼" diameter except where noted.
Leave all pulley bolts hand tight until Step 14 is completed.

A. Insert two Pulleys (15) into Angled Support Frame (E) as shown using:
Two 48 (M10x65 hex head bolt)
Four 13 (pulley spacer)
Two 56 (M10 nylon lock nut)

B. Install two Pulleys (15) onto Main Base Frame (A) as shown using:
Two 49 (M10x45 hex head bolt)
Four 58 (M10 washer)
Two 56 (M10 nylon lock nut)

NOTE: Leave all hardware finger tight.
Do not wrench tighten hardware until Step 14 is completed.

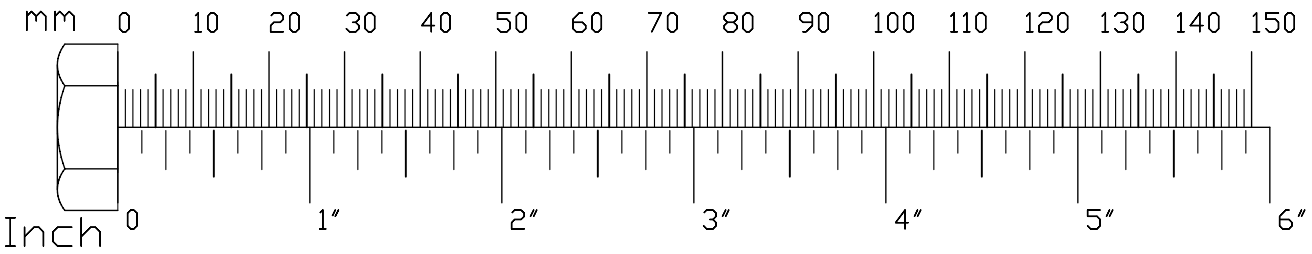

STEP
8

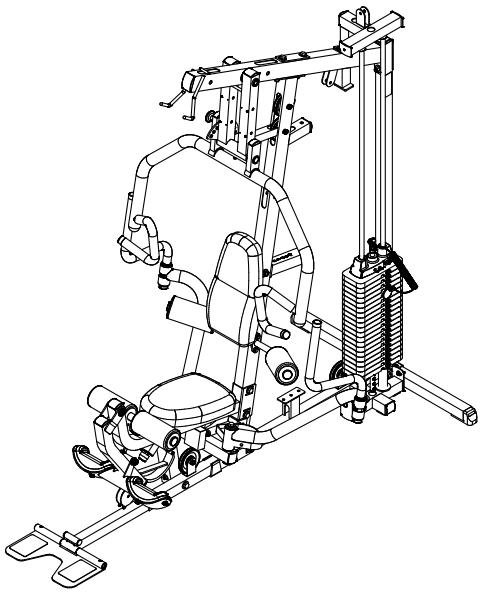

Above shows Step 8 assembled and completed.

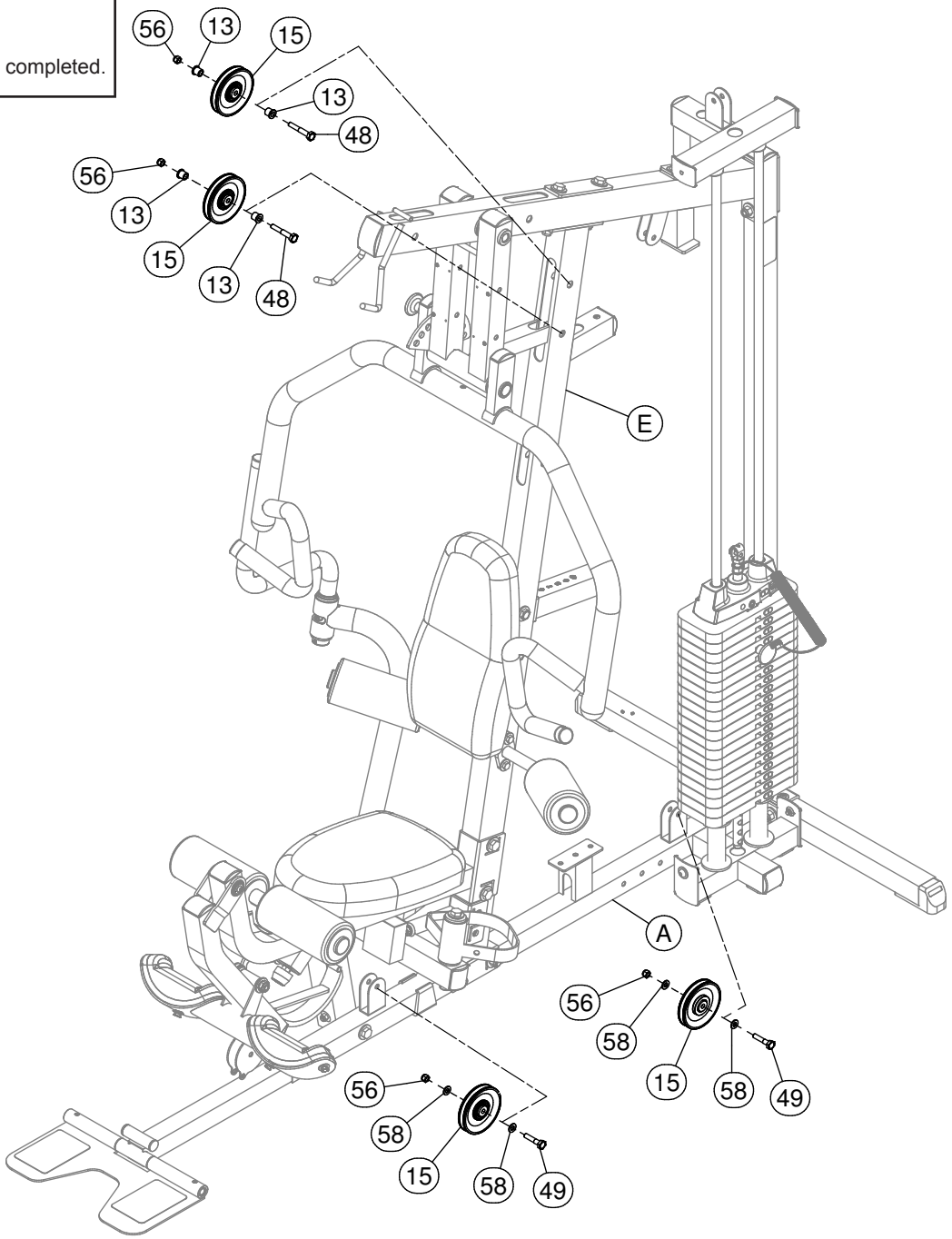

STEP 9

Be careful to assemble all components in the sequence they are presented.

NOTE: All Pulleys in this step are 4 ¼" diameter except where noted.
Leave all pulley bolts hand tight until Step 14 is completed.

Lat Pulldown Cable (96)

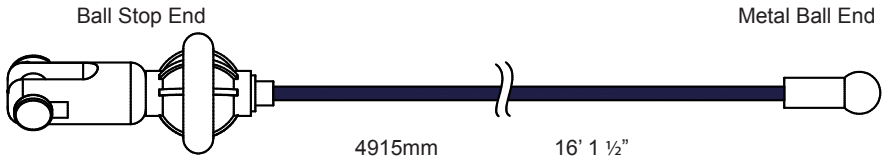

A. See Diagram 1. Begin at the High Pulley Station. Route the Lat Pulldown Cable (96) up through the first opening where pulley (A1) will be installed, and out through the top.

B. Route Cable (96) above Top Frame (F) and then down through the second opening where pulley (A2) will be installed. Pull the entire length of cable through.

C. See Diagram 2. Insert 3 ½" Pulley (A1) and 4 ¼" Pulley (A2) into Top Frame (F) under Cable (96) and attach using for each pulley:
One 48 (M10x65 hex head bolt)
Two 13 (pulley spacer)
One 56 (M10 nylon lock nut)

D. Route Cable (96) around Pulley (A3) as shown in Diagram 1 and attach Pulley (A3) to Seated Press Arm Support (N) as shown in Diagram 2 using:
One 46 (M10x185 hex head bolt)
Two 12 (metal spacer)
One 56 (M10 nylon lock nut)
Two 109 (M10 washer)

E. See Diagram 1. Feed Cable (96) above installed Pulley (A4). Route Cable (96) around Pulley (A4) then feed it back between Pulley (A4) and installed Pulley (A6).

F. Pull Cable (96) around Pulley (A5) as shown in Diagram 1 and attach Pulley (A5) to Seated Press Arm Support (N) as shown in Diagram 2 using:
One 46 (M10x185 hex head bolt)
Two 12 (metal spacer)
One 56 (M10 nylon lock nut)
Two 109 (M10 washer)

G. See Diagram 1. Feed Cable (96) back between Pulley (A4) and Pulley (A6) already installed. Pull entire length of Cable (96) through, and feed down through the hole in the small arm sticking out of Angled Support Frame (E).

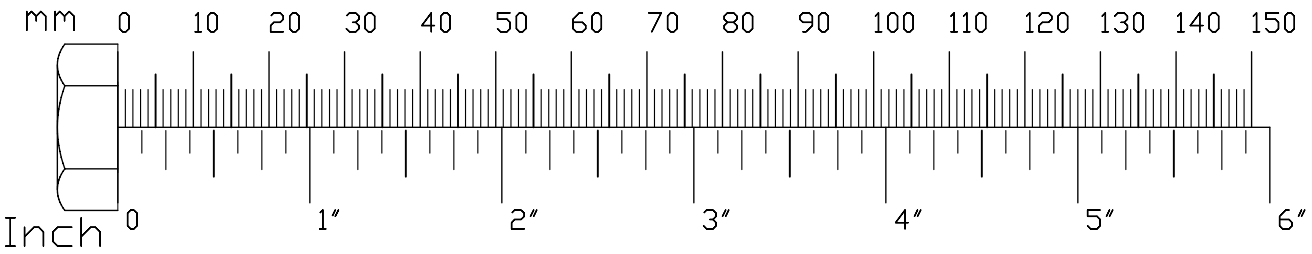

STEP 9

Diagram 1
Cable Installation

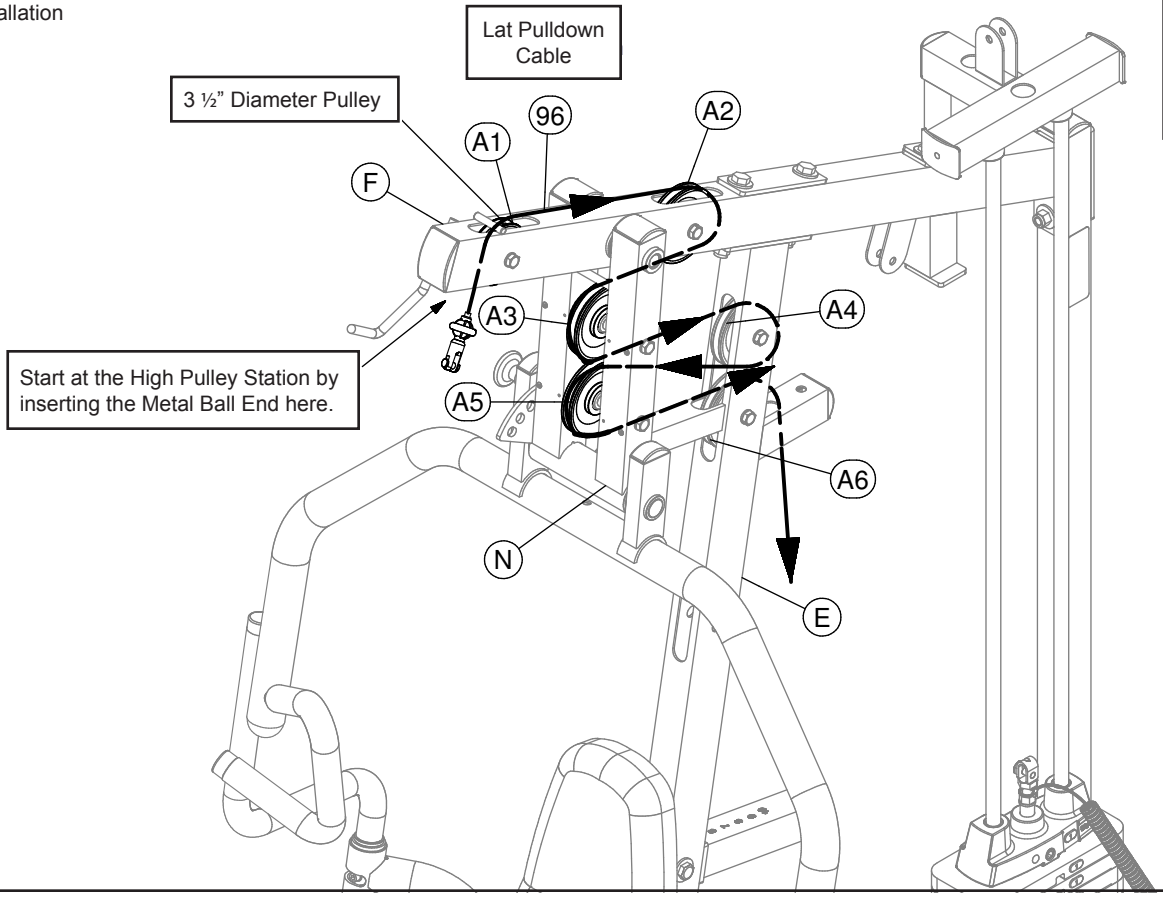

Diagram 2
Pulley Installation

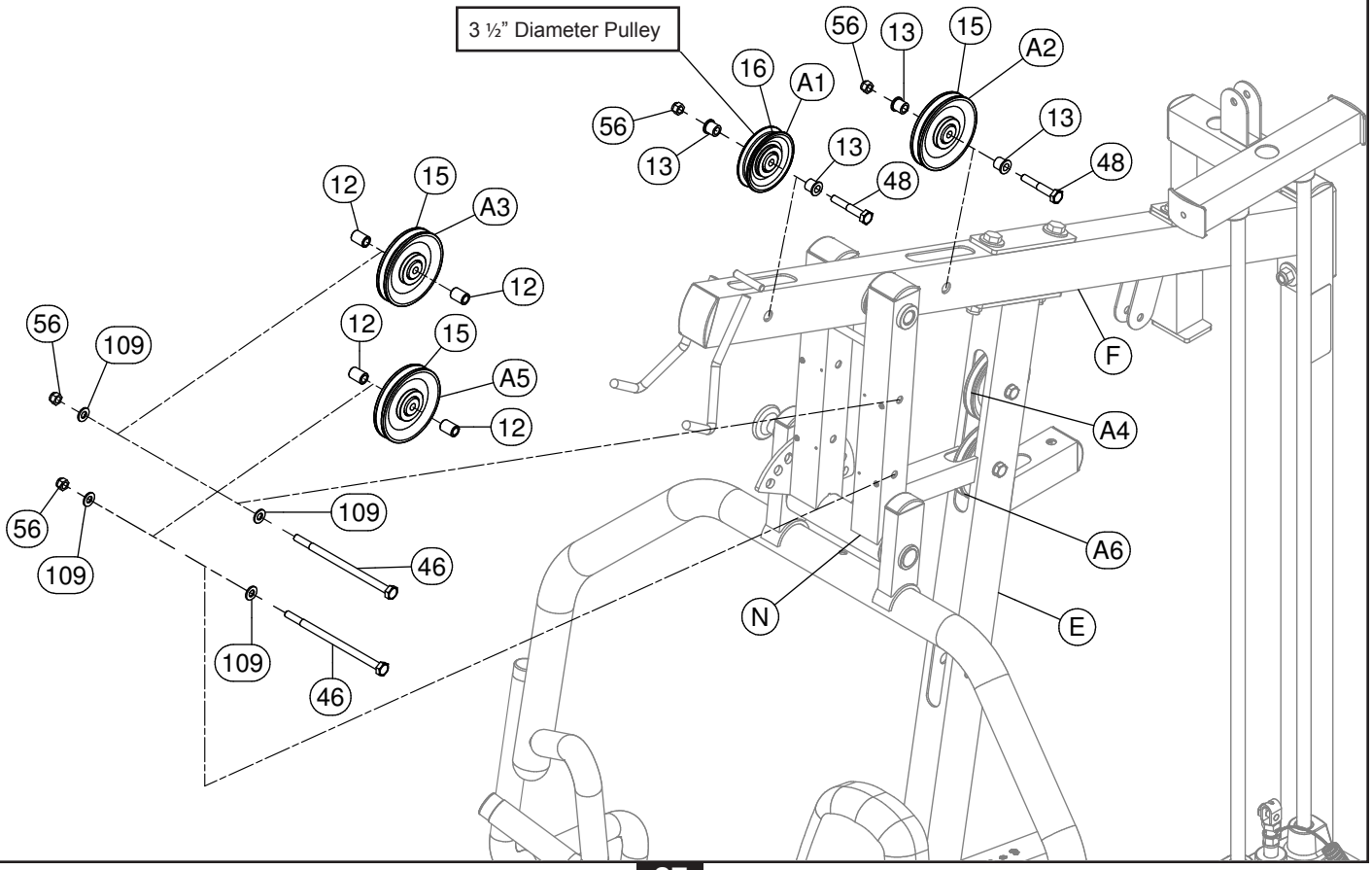

STEP
10

Be careful to assemble all components in the sequence they are presented.

NOTE: All Pulleys in this step are 4 ¼" diameter except where noted.
Leave all pulley bolts hand tight until Step 14 is completed.

Lat Pulldown Cable (96)

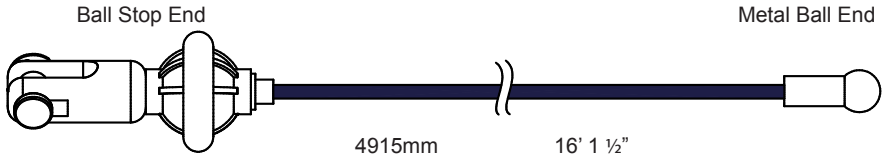

A. See Diagram 2. Attach Double Adjustable Pulley Holder (CA) to the small arm sticking out of the Angled Support Frame (E) as shown using:
One 57 (M12 washer)
One 55 (M12 nylon lock nut)
One 69 (M12 spring washer)

B. Install Pulley (A7) into Double Adjustable Pulley Holder (CA), install into the second hole from the top, as shown in Diagram 2 using:
One 49 (M10x45 hex head bolt)*
Two 58 (M10 washer)
One 56 (M10 nylon lock nut)

C. See Diagram 1. Route Cable (96) through Double Adjustable Pulley Holder (CA) and under Pulley (A7).

D. See Diagram 1. Route Cable (96) through the flange hanging from Top Frame (F) and hold in place with Pulley (A8). Install Pulley (A8) as shown in Diagram 2 using:
One 49 (M10x45 hex head bolt)
Two 58 (M10 washer)
One 56 (M10 nylon lock nut)

E. Route Cable (96) through the top of 45° Double Pulley Holder (CB) and hold in place with Pulley (A9) as shown in Diagram 2 using:
One 49 (M10x45 hex head bolt)
Two 58 (M10 washer)
One 56 (M10 nylon lock nut)

F. Attach Rubber Pad (129) to the top of Double Pulley Holder (CB) as shown.

G. Attach Rubber Pad (130) under Top Frame (F) as shown.

H. See Diagram 2. Install Pulley (A10) to the flange above Top Weight Stack Frame (AB) using:
One 49 (M10x45 hex head bolt)
Two 58 (M10 washer)
One 56 (M10 nylon lock nut)

I. See Diagram 1. Route Cable (96) up through Top Weight Stack Frame (AB) above Pulley (A10), and down through Top Weight Stack Frame (AB) towards the weight stack.

J. See Diagram 1A. Remove Hex Head Bolt (38) from Selector Rod Top Bolt (37), slide Cable (96) through Selector Rod Top Bolt (37) and out through the side. Attach Cable End Shaft (90) and tighten Allen Screw (91). Pull Cable (96) tight, so Cable End Shaft (90) fits inside Selector Rod Top Bolt (37). Reinstall Hex Head Bolt (38) in Selector Rod Top Bolt (37).

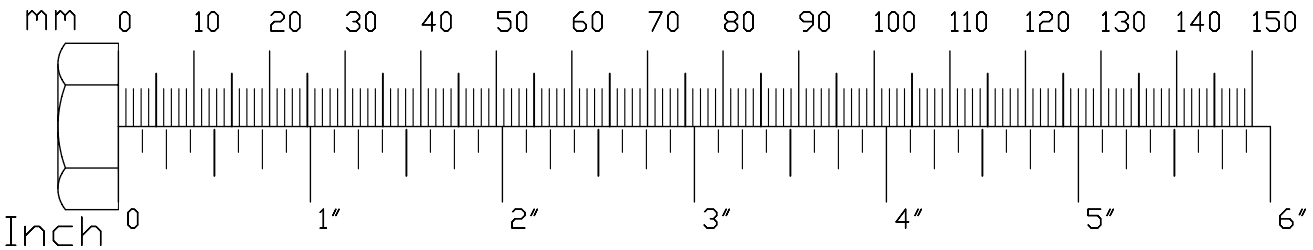

STEP 10

Diagram 1
Cable Installation

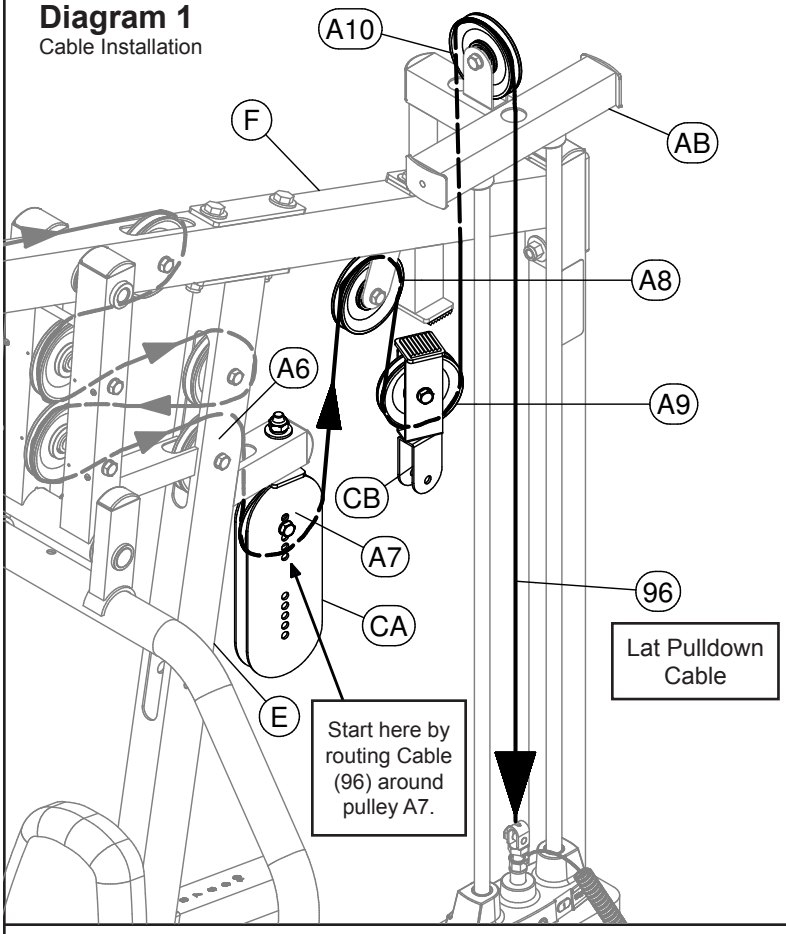

Diagram 1A

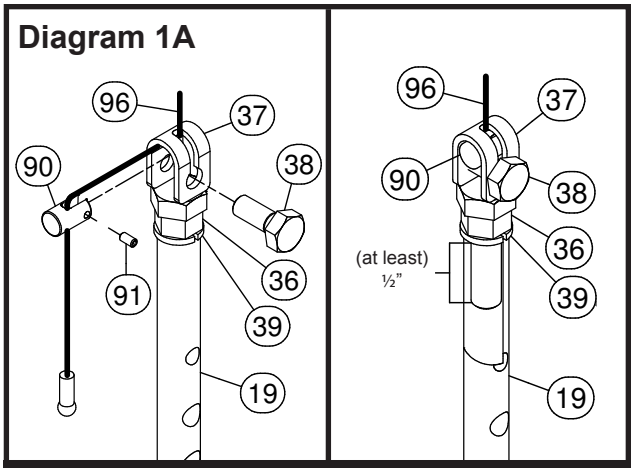

⚠ WARNING ⚠

Selector Rod Top Bolt (37) must be threaded a minimum of ½" into the Selector Rod (19), and Jam Nut (36) tightened securely against Spring Lock Washer (39) to ensure proper connection. Check Jam Nut (36) once a week to make sure it is tight.

Diagram 2
Pulley Installation

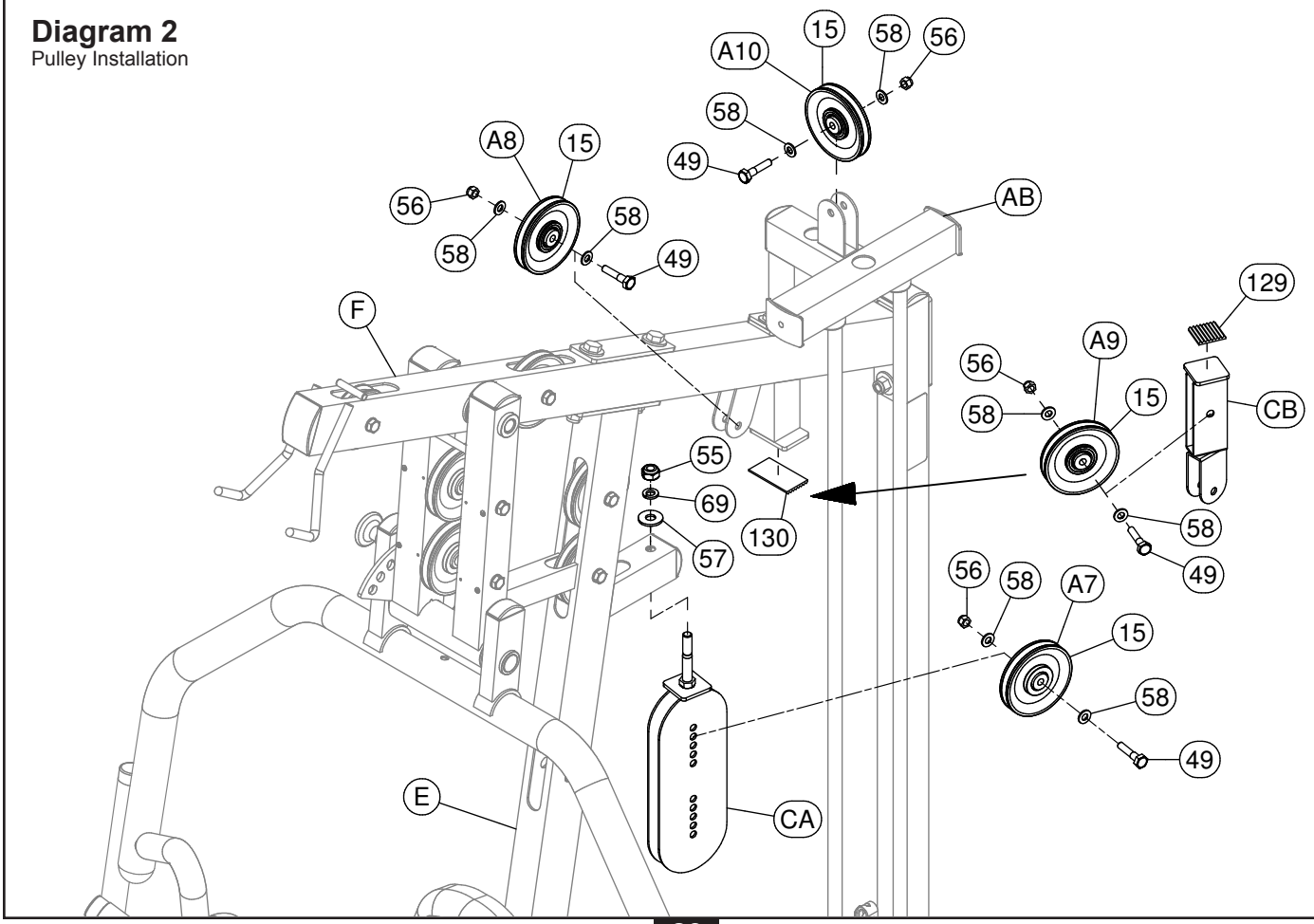

STEP 11

Be careful to assemble all components in the sequence they are presented.

NOTE: All Pulleys in this step are 4 ¼" diameter except where noted. Leave all pulley bolts hand tight until Step 14 is completed.

Ab Crunch Cable (97)

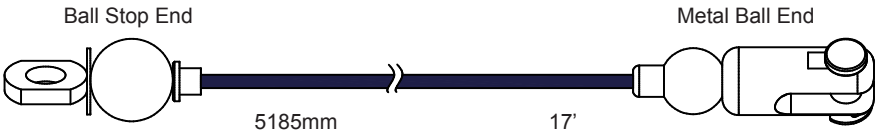

A. See Diagram 1. Insert either end of Ab Crunch Cable (97) into the opening in Angled Support Frame (E), above Back Pad (X), and pull entire length of cable through.

B. Install Pulley (B1) into Angled Support Frame (E) under Cable (97) as shown in Diagram 2 using:
One 48 (M10x65 hex head bolt)
Two 13 (pulley spacer)
One 56 (M10 nylon lock nut)

C. See Diagram 1. Route Cable (97) through the top of the 90° Double Pulley Holder (CC) and hold Cable (97) in place with Pulley (B2) using:
One 49 (M10x45 hex head bolt)
Two 58 (M10 washer)
One 56 (M10 nylon lock nut)

D. See Diagram 1. Route Cable (97) through the bottom of the Double Adjustable Pulley Holder (CA).

E. Insert Pulley (B3) into Double Pulley Holder (CA) and install into the second hole from the bottom as shown in Diagram 2 using:
One 49 (M10x45 hex head bolt)
Two 58 (M10 washer)
One 56 (M10 nylon lock nut)

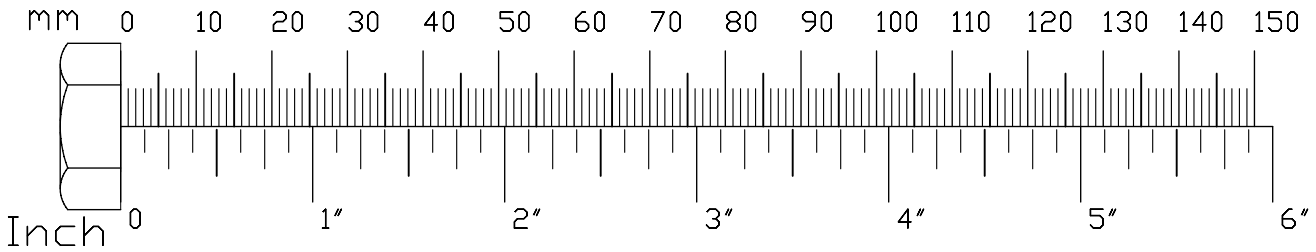

STEP 11

Diagram 1
Cable Installation

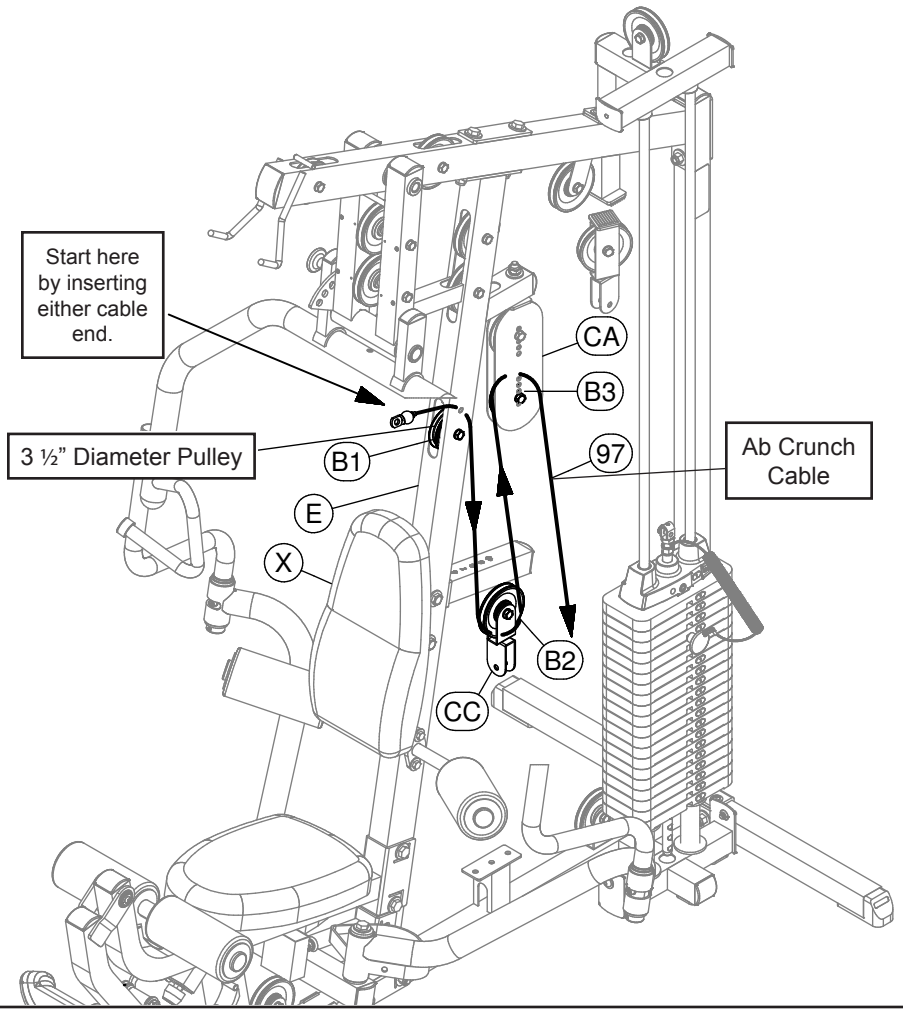

Diagram 2
Pulley Installation

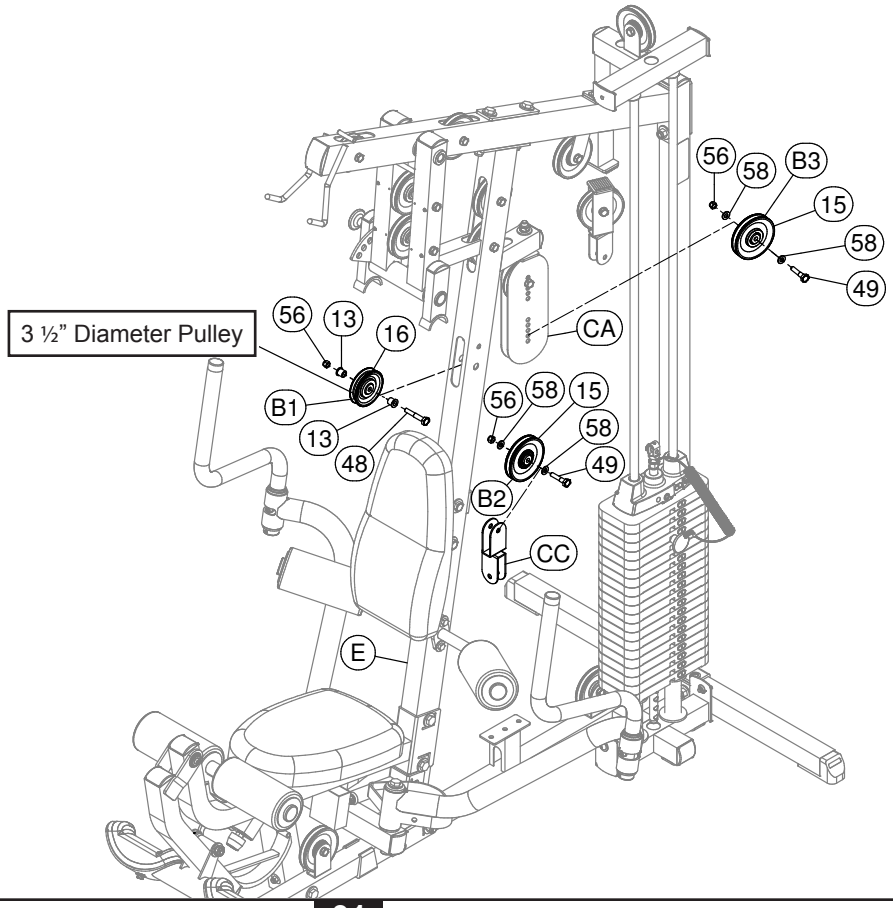

STEP 12

Be careful to assemble all components in the sequence they are presented.

NOTE: All Pulleys in this step are 4 ¼" diameter except where noted. Leave all pulley bolts hand tight until Step 14 is completed.

Ab Crunch Cable (97)

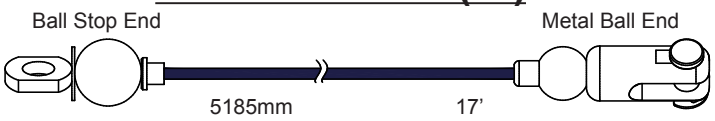

Short Cable (99)

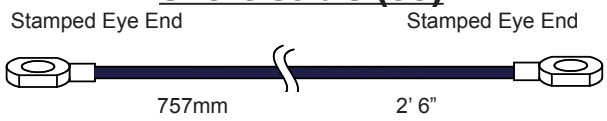

A. See Diagram 1. Route Cable (97) through Pulley Holder with Hook (CD) and hold Cable (97) in place with Pulley (B4) as shown in Diagram 2 using:
One 49 (M10x45 hex head bolt)
Two 58 (M10 washer)
One 56 (M10 nylon lock nut)

NOTE: To install the Leg Press on the G5S, refer to the Leg Press Owner's Manual.

B. If a Leg Press is not being installed onto your G5S, connect Short Cable (99) to the bottom of Pulley Holder With Hook (CD) and secure the Stamped Eye End of Short Cable (99) using Acorn Cap Nut (100) as shown in the diagram. Connect the Stamped Eye End of Short Cable (99) to Main Frame (A) using:
One 63 (M10x70 hex head bolt)
Two 58 (M10 washer)
One 56 (M10 nylon lock nut)

C. See Diagram 1. Route Cable (97) through the bottom of the 45° Double Pulley Holder (CB) and hold Cable (97) in place with Pulley (B5) as shown in Diagram 2 using:
One 49 (M10x45 hex head bolt)
Two 58 (M10 washer)
One 56 (M10 nylon lock nut)

D. See Diagram 1. Route Cable (97) under installed Pulley (B6). Route Cable (97) forward towards the front of the gym. Insert Cable (97) through the small pillar in Main Frame (A) then through Angled Support Frame (E) under installed Pulley (B7).

E. See Diagram 1. Route Cable (97) through the pulley holder at the end of the Leg Extension Arm (Y). Install Pulley (B8) as shown in diagram 2 using:
One 107 (⅜" x 1 ¾" hex head bolt)
Two 109 (M10 washer Ø19)
One 108 (⅜" nylon lock nut)
One 49 (M10 x 45 hex head bolt)
Two 58 (M10 washer)
One 56 (M10 nylon lock nut)

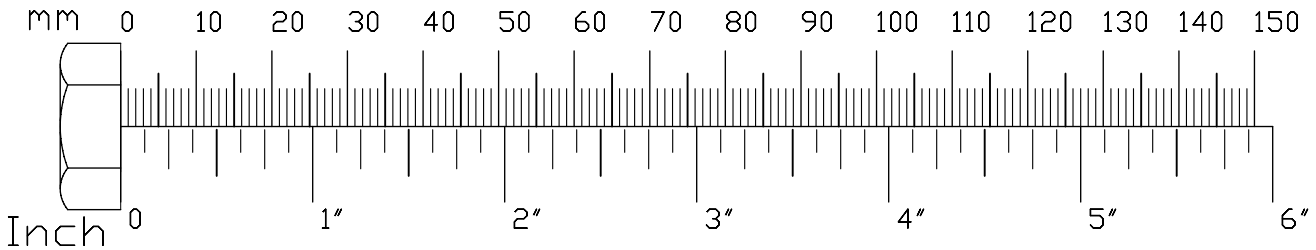

STEP 12

Diagram 1
Cable Installation

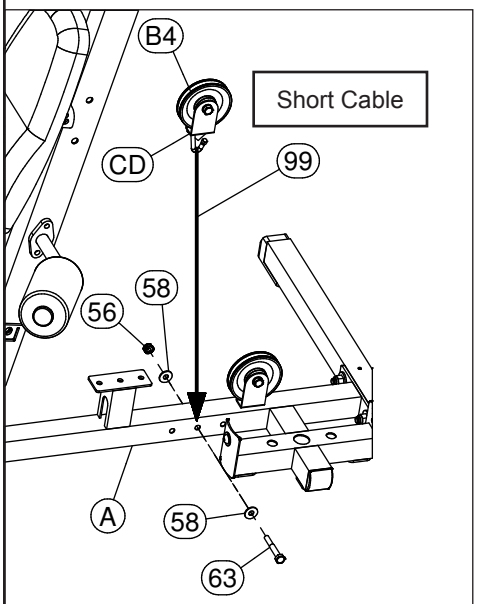

G5 Installation without Leg Press Attachment

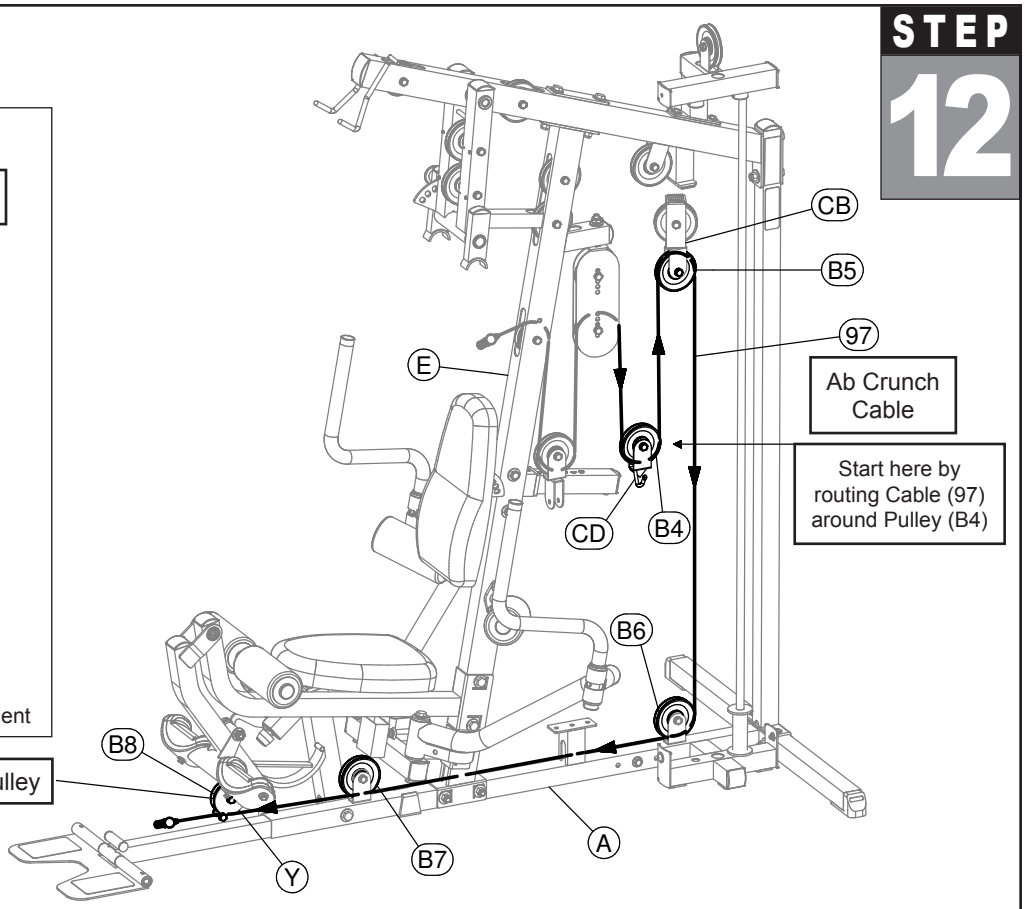

Diagram 2
Pulley Installation

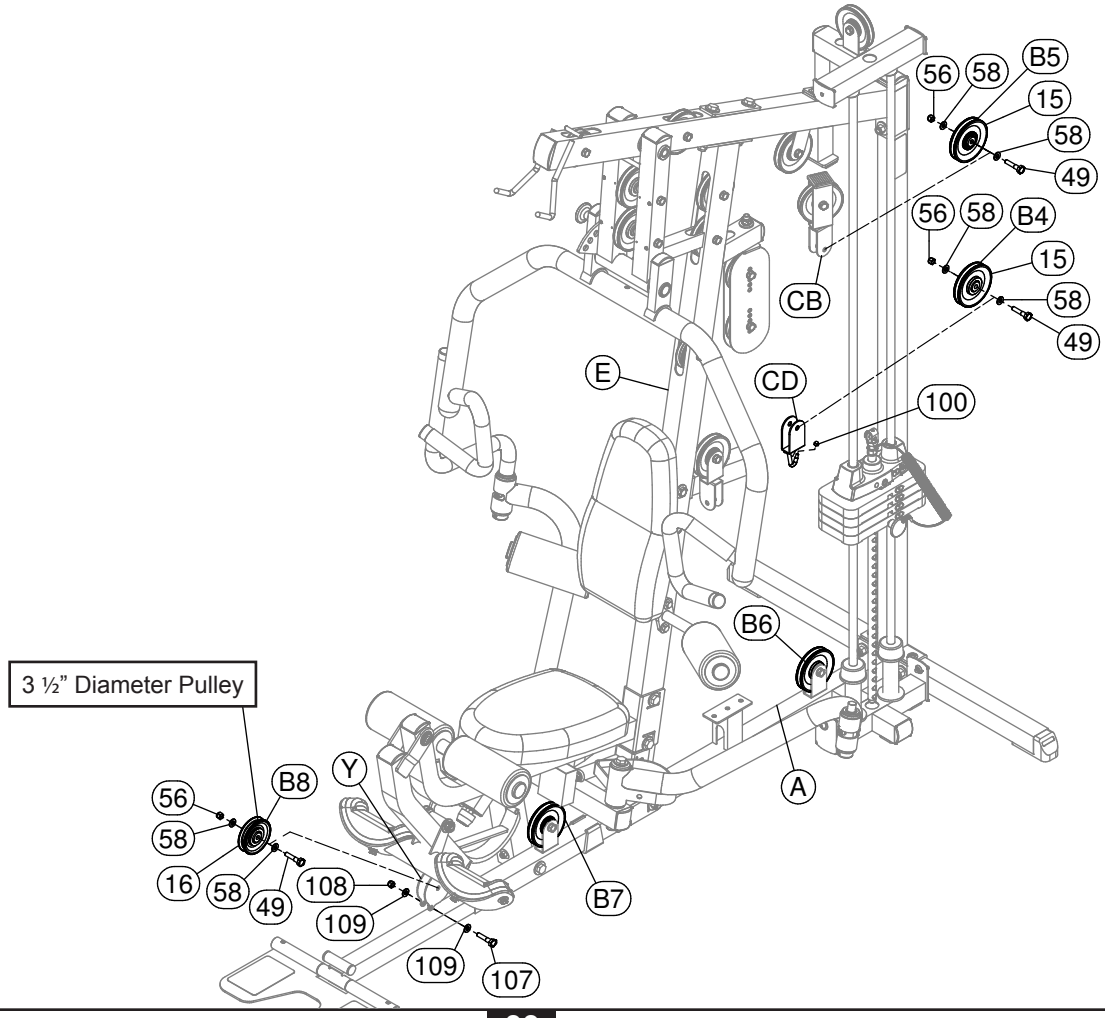

STEP 13

Be careful to assemble all components in the sequence they are presented.

NOTE: All Pulleys in this step are 4 ¼" diameter except where noted.
Leave all pulley bolts hand tight until Step 14 is completed.

Pec Dec Cable (98)

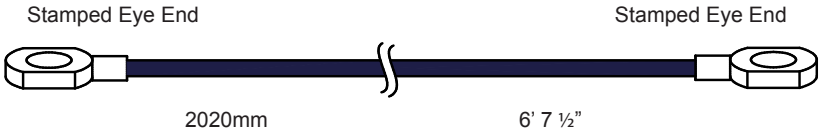

A. See Diagram 2. Attach Pec Dec Pulley Frame (AC) to Main Frame (A) using:
Two 50 (M10x25 hex head bolt)
Four 58 (M10 washer)
Two 56 (M10 nylon lock nut)

B. See Diagram 2. Attach two End Caps (6) to both ends of Pec Dec Pulley Frame (AC).

C. See Diagram 2. Attach Right Pec Dec Pulley Holder (AD) to Pec Dec Pulley Frame (AC) using:
One 62 (M10x16 allen bolt)
One 58 (M10 washer)

D. Attach Left Pec Dec Pulley Holder (AE) to Pec Dec Pulley Frame (AC) using:
One 62 (M10x16 allen bolt)
One 58 (M10 washer)

E. Bolt Pec Dec Cable (98) to cam on Right Pec Dec Arm (L) as shown in Diagram 1 using:
One 44 (M10x20 hex head bolt)
Two 58 (M10 washer)
One 56 (M10 nylon lock nut)

F. See Diagram 1. Route Cable (98) through Right Pec Dec Pulley Holder (AD) then hold Pec Dec Cable (98) in place with Pulley (C1) using:
One 49 (M10x45 hex head bolt)
Two 58 (M10 washer)
One 56 (M10 nylon lock nut)

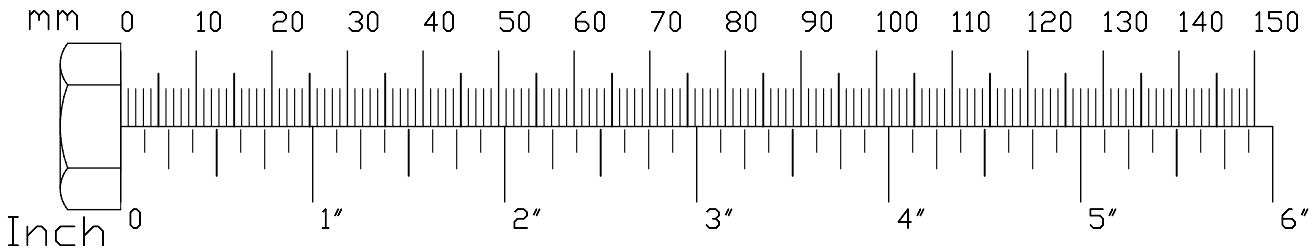

STEP 13

Diagram 1
Cable Installation

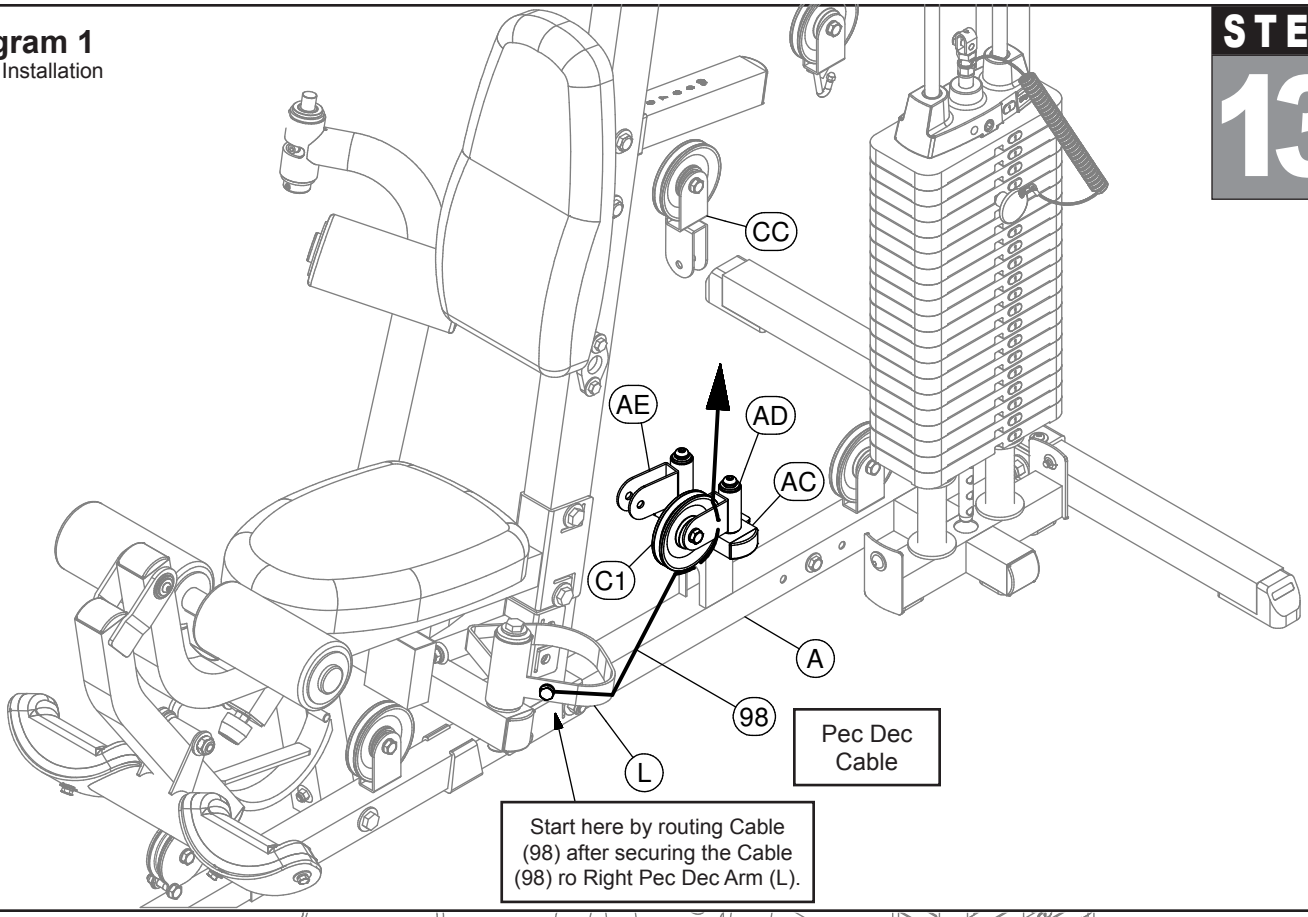

Diagram 2
Pulley Installation

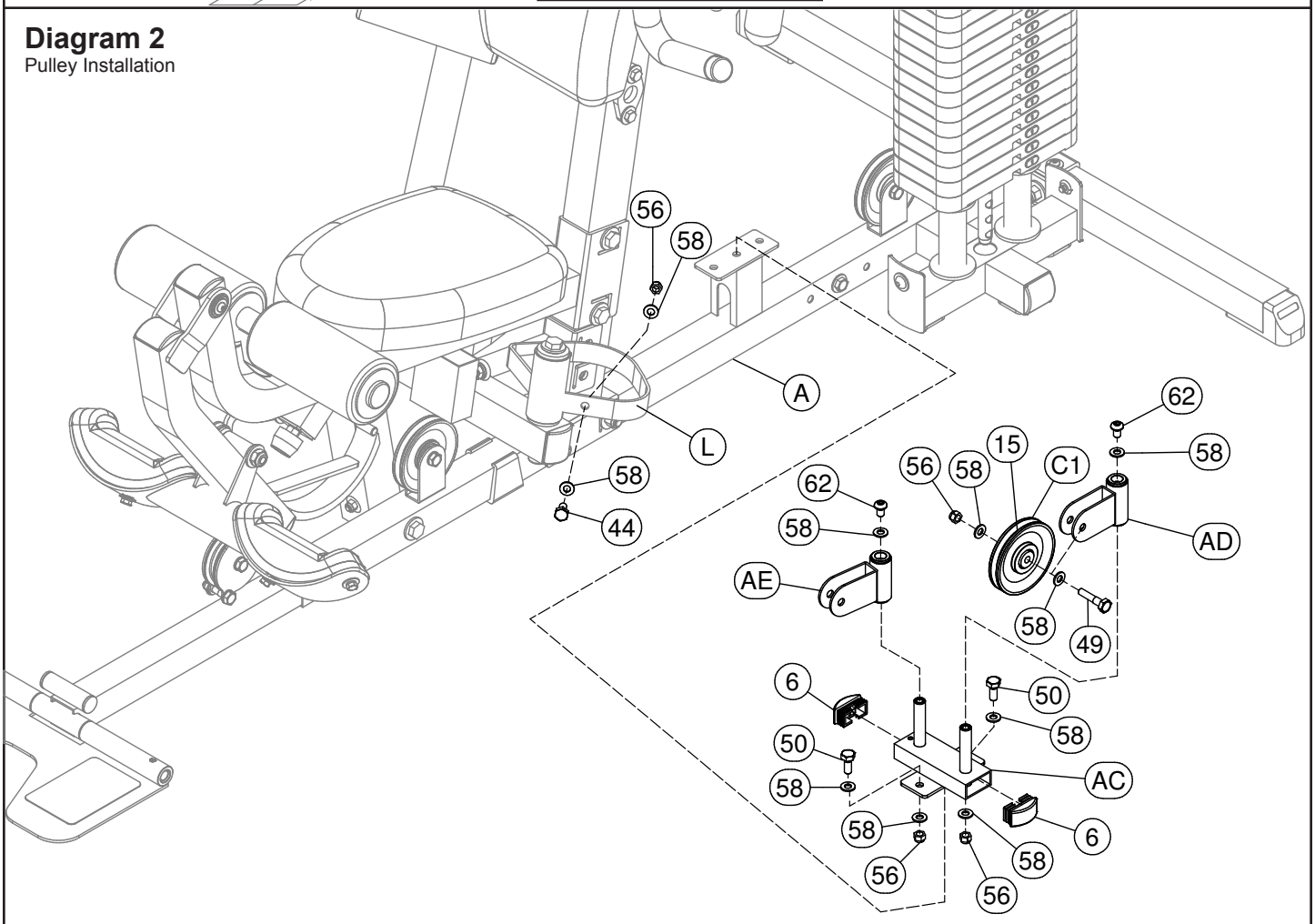

STEP 14

Be careful to assemble all components in the sequence they are presented.

NOTE: All Pulleys in this step are 4 ¼" diameter except where noted. Leave all pulley bolts hand tight until Step 14 is completed.

Pec Dec Cable (98)

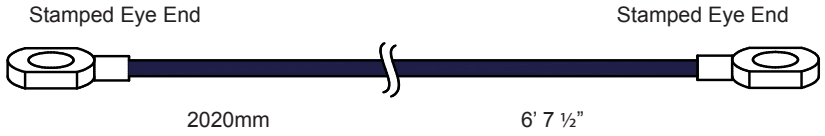

A. See Diagram 1. Route Pec Dec Cable (98) up and into 90° Double Pulley Holder (CC) and install Pulley (C2) using:
One 49 (M10x45 hex head bolt)
Two 58 (M10 washer)
One 56 (M10 nylon lock nut)

B. Insert Pec Dec Cable (98) into Left Pec Dec Pulley Holder (AE) hold cable in place by installing Pulley (C3) as shown in Diagram 2 using:
One 49 (M10x45 hex head bolt)
Two 58 (M10 washer)
One 56 (M10 nylon lock nut)

C. Attach Pec Dec Cable (98) to cam on Left Pec Dec Arm (J) using:
One 44 (M10x20 hex head bolt)
Two 58 (M10 washer)
One 56 (M10 nylon lock nut)

NOTE: Now you may wrench tighten *all* finger tight hardware on the unit.

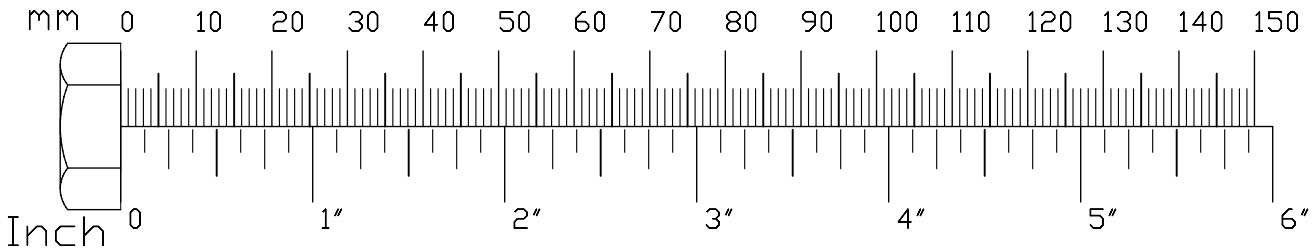

Diagram 1
Cable Installation

STEP 14

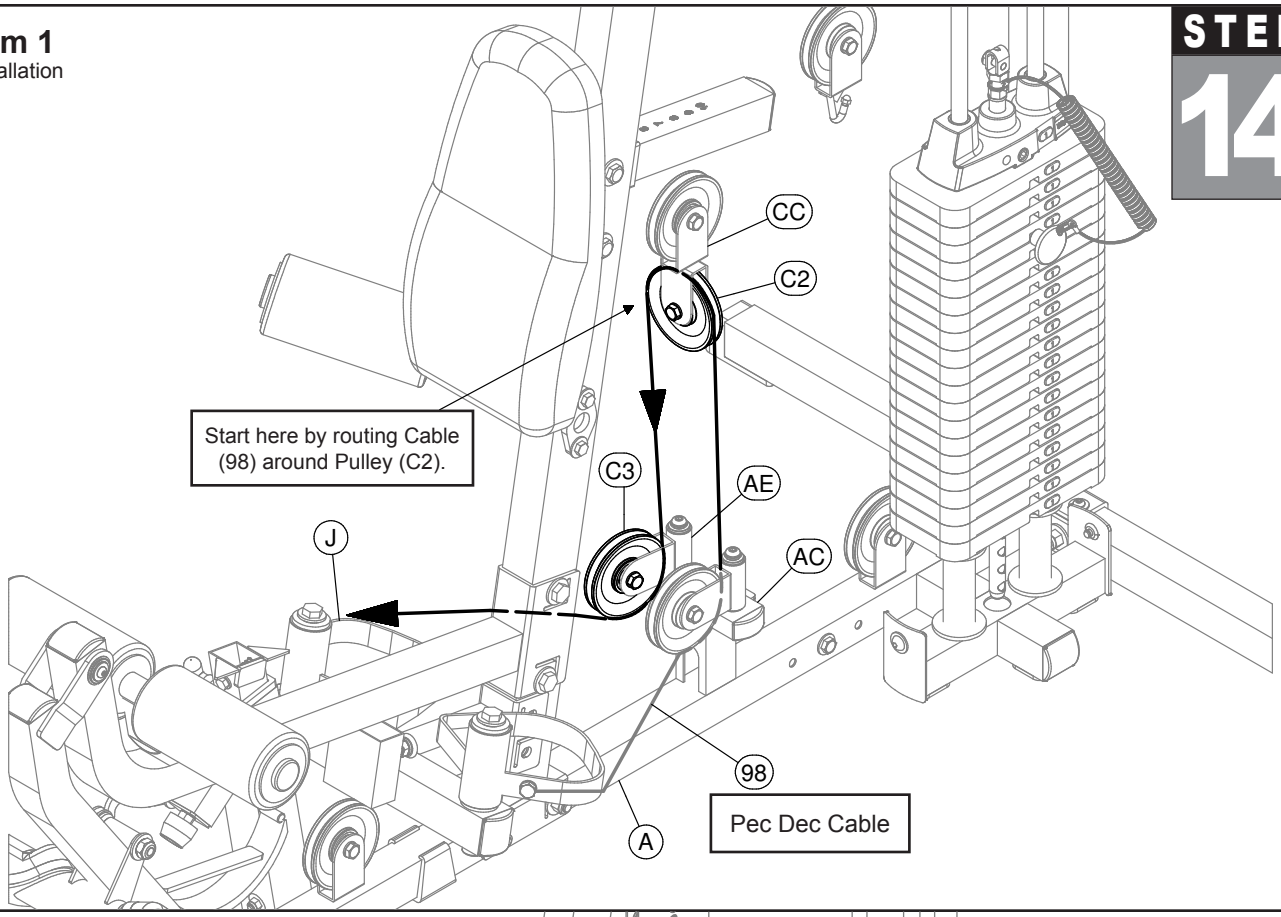

Diagram 2
Pulley Installation

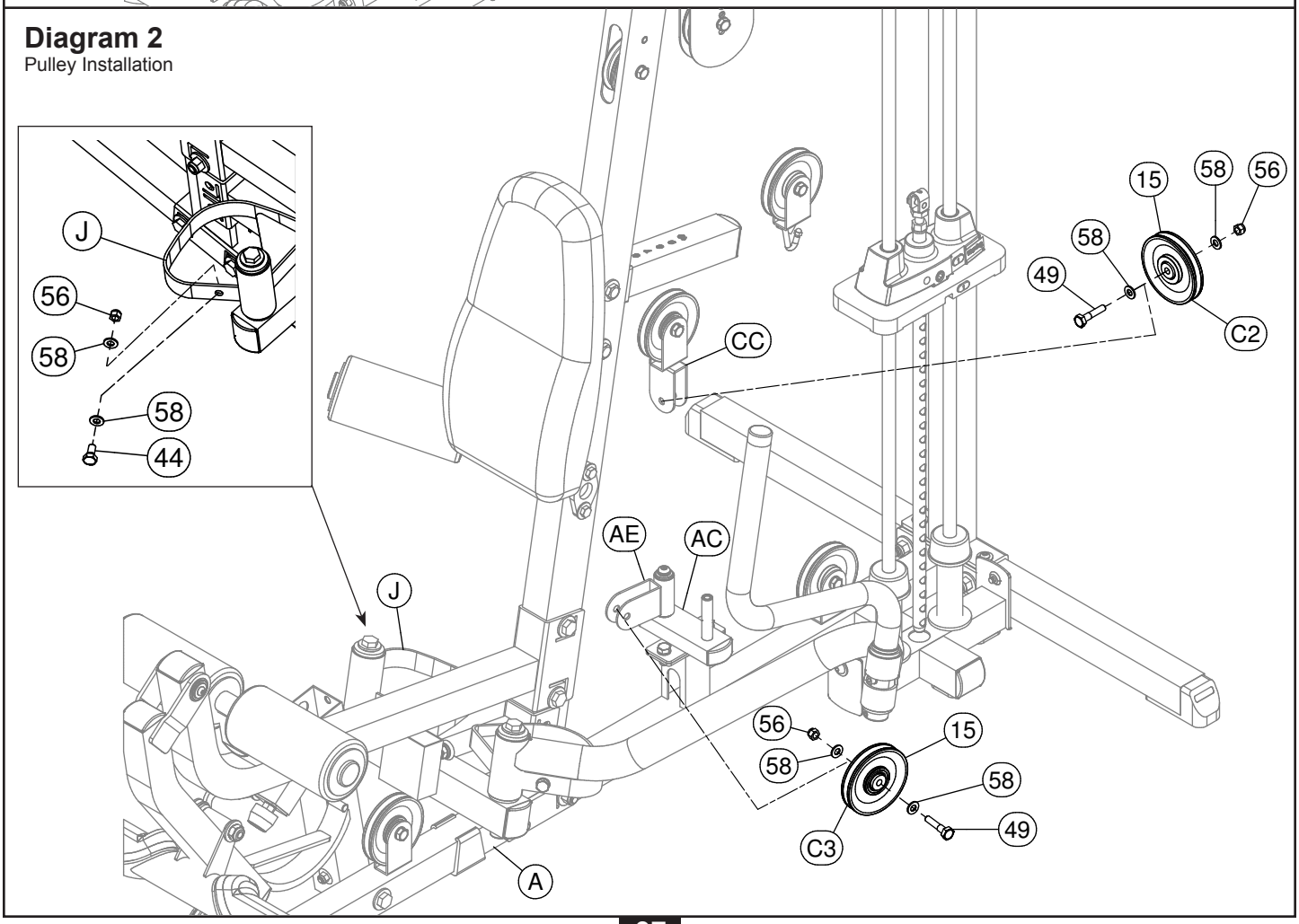

STEP 15

Be careful to assemble all components in the sequence they are presented.

NOW IS THE TIME TO MAKE ALL NECESSARY CABLE ADJUSTMENTS

After cable installation is complete you must check all cables for proper tension. Obvious signs that cable tension problems exist include:

- Top Plate (18) does not rest directly on the top Weight Stack Plate (25).
- The holes in Selector Bar (19) do not line up with holes in Weight Stack Plates (25).
- Cable(s) are sloppy and there is no resistance from the weight stack for the first few inches of the exercise.

There are SEVEN areas for cable adjustment on the G5S:

- Selector Rod Top Bolt (37).
- TWO adjustments in Double Adjustable Pulley Holder (CA).
- TWO Rubber Stops (23).
- TWO Rubber Stops (120).

If there is to much tension, and Top Plate (18) is not resting directly on the top Weight Stack Plate (25):

- Move pulley (A7) up, or Pulley (B3) down in the Double Adjustable Pulley Holder (CA).
- Turn and tighten one of the Rubber Stops (23) or Rubber Stops (120).

If there is to much play or excessive slack:

- Turn and loosen the Rubber Stop (23) or Rubber Stops (120).
- Move Pulley (A7) down, or Pulley (B3) up in the Double Adjustable Pulley Holder (CA).
- Screw the Selector Rod Top Bolt (37) farther into the Selector Rod (19).

NOTE: Cables should be inspected daily and adjusted periodically to ensure safe and smooth operation.

NOTE: After cable adjustment is complete, go back and tighten the two bolts securing the pulleys on Double Adjustable Pulley Holder (CA).

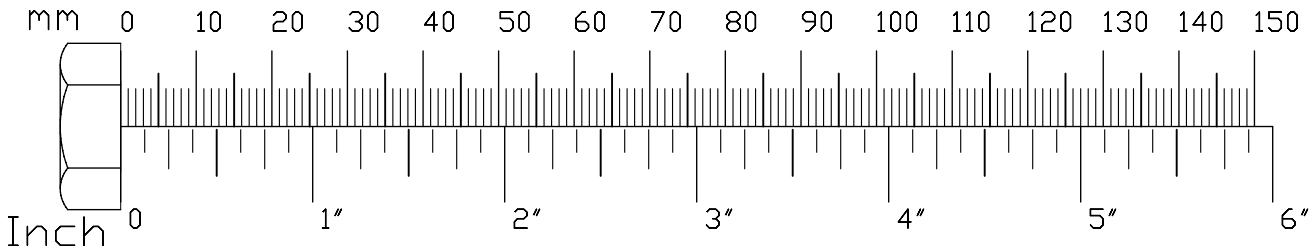

STEP 15

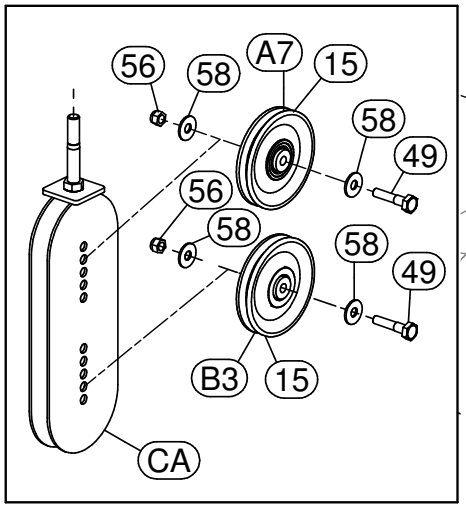

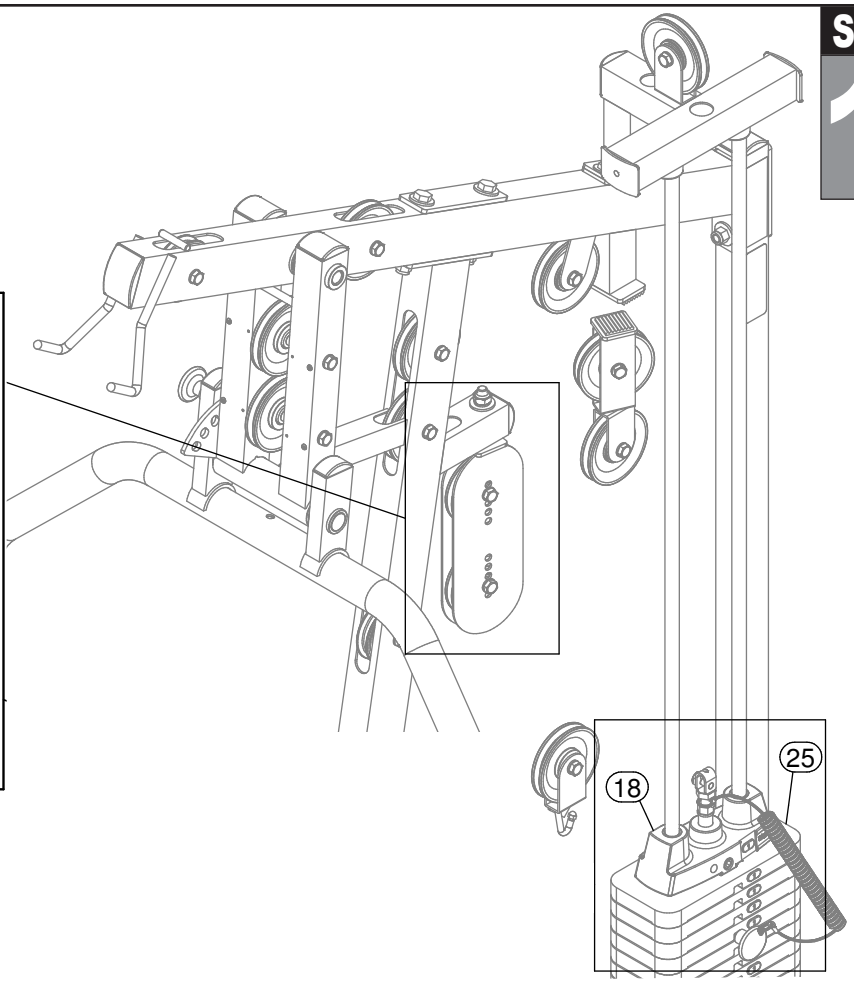

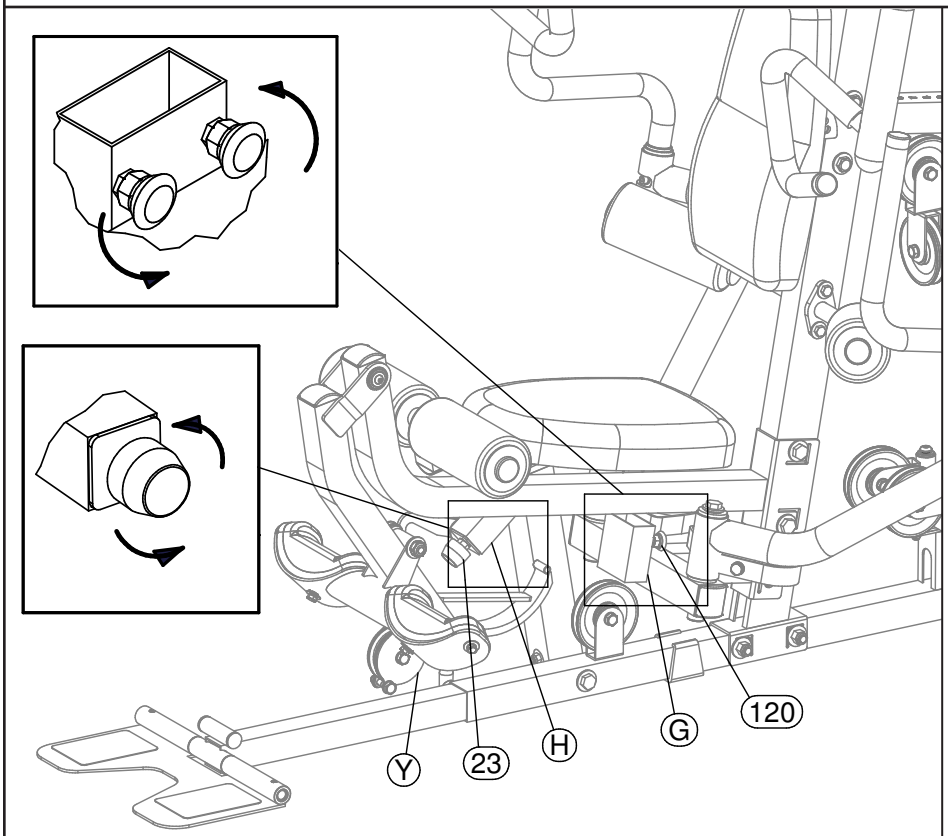

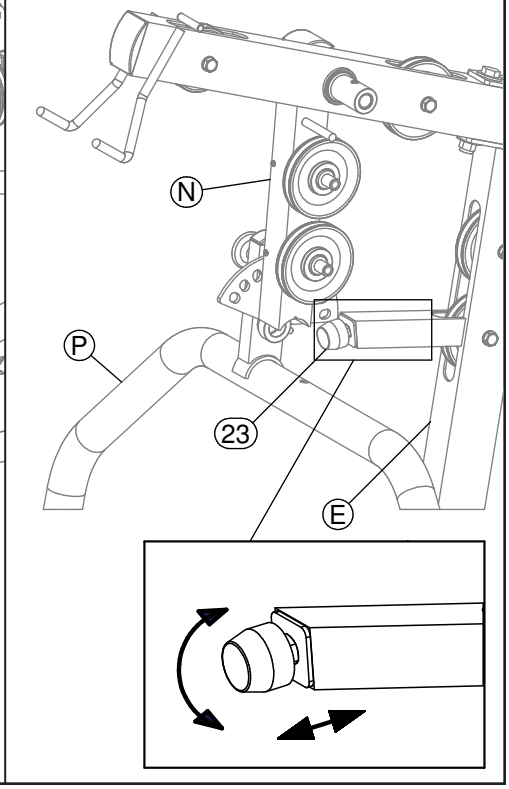

STEP
16

Be careful to assemble all components in the sequence they are presented.

NOTE: Weight Stack Shroud (BA) is pre-assembled with Shroud Insert (BB).

A. Attach Weight Stack Shroud (BA) to the side of the weight stack as shown. Reference the Shroud Top View.

B. Secure Weight Stack Shroud (BA) onto the bottom of Main Base Frame (A) and at the top of Top Weight Stack Frame (AB) using:
Two 62 (M10x16 round allen head)
Two 58 (M10 washer)

C. Secure Weight Stack Shroud (BC) onto the bottom of Main Base Frame (A) and at the Top of Weight Stack Frame (AB) as using:
Two 62 (M10x16 round allen head)
Two 58 (M10 washer)

D. Attach the G5S Press Arm Shroud (BD) to Seated Press Arm Support (N) using:
Four 68 (M4x10 round allen head)

E. Connect Water Bottle Bracket (102) to Weight Stack Shroud (BA) using:
Two 103 (M4x12 screw)
Four 125 (M4 washer)
Two 126 (M4 nut)

F. Slide Water Bottle Holder (101) onto Water Bottle Bracket (102) as shown.

G. Insert Water Bottle (131) into Water Bottle Holder (101).

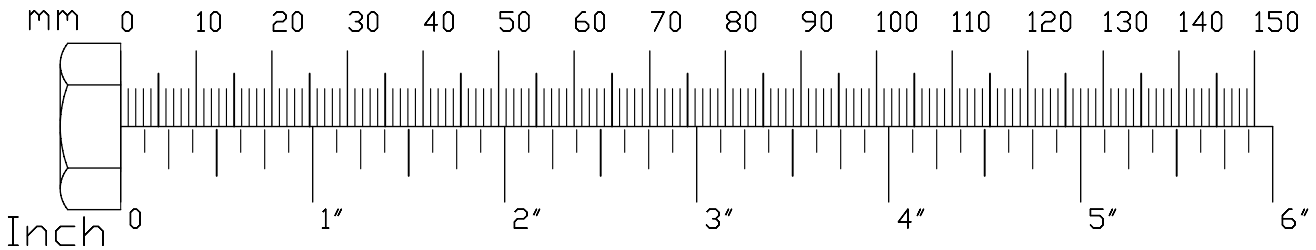

STEP 16

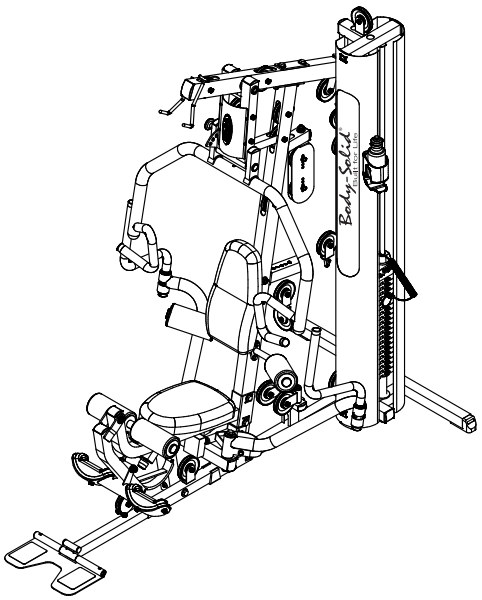

Above shows Step 16 assembled and completed.

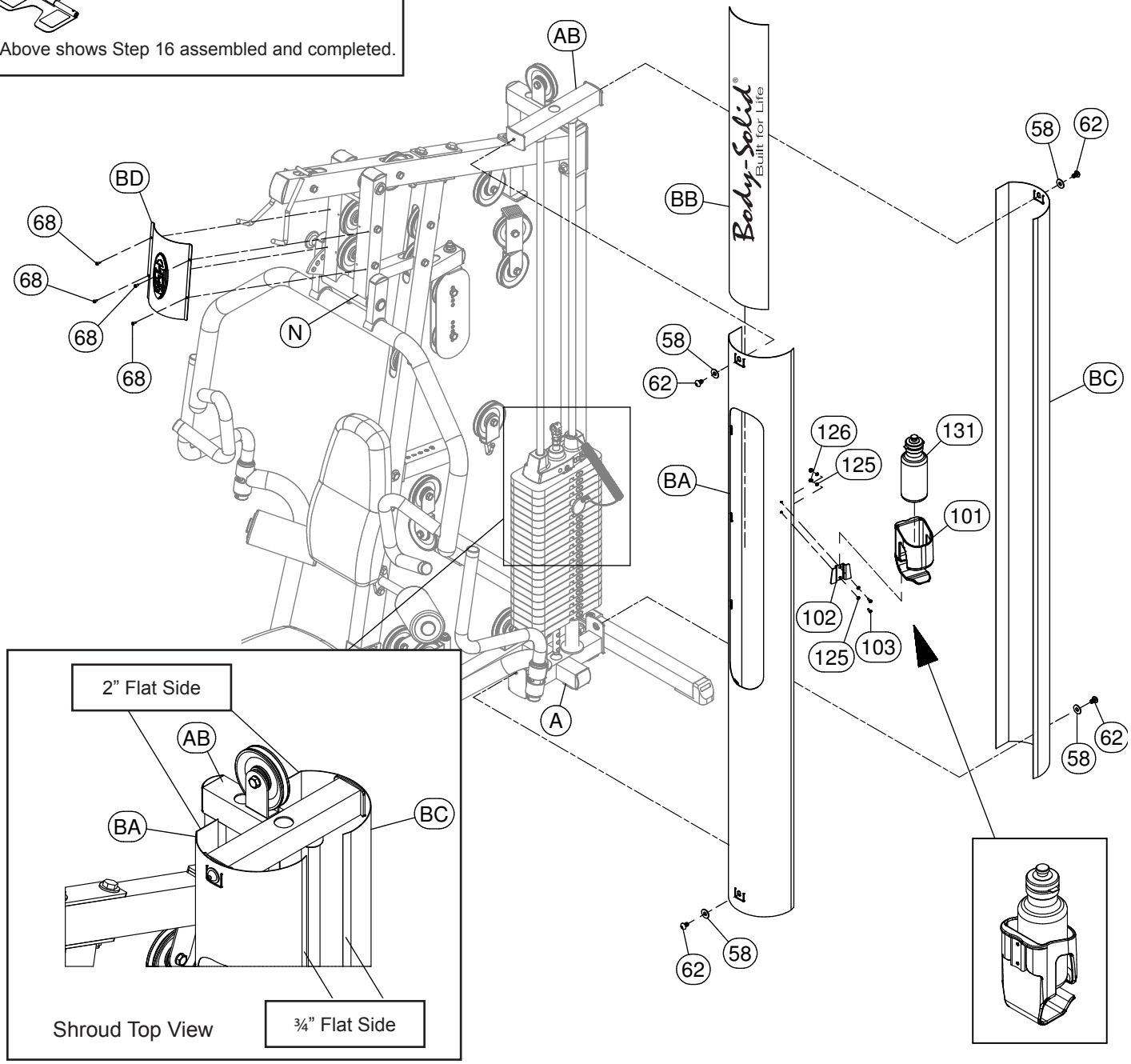

Shroud Top View

SEATED PRESS ARM (P) ADJUSTMENT

- Grasp Seated Press Arm (P) with one hand.
- Pull Ball Head Pop Pin (84) with your other hand to release Seated Press Arm (P).
- Adjust Seated Press Arm (P) to the desired position (depending on the exercise you are performing).
- Release Ball Head Pop Pin (84), and make sure it is fully engaged into the selector hole.

BACK PAD (X) ADJUSTMENT

- Grasp Back Pad (X).
- Turn T-Shaped Pop Pin (26) in Back Pad Holder (T) counter clockwise to unlock it and then pull T-Shaped Pop Pin (26) to release the Chrome Back Pad Frame (U). Adjust Back Pad (X) to the desired position.
- Release the T-Shaped Pop Pin (26) and make sure it is fully engaged into the selector hole in the Chrome Back Pad Frame (U). Turn T-Shaped Pop Pin (26) clockwise to lock it in place.
- For certain exercises you may wish to change the angle of Back Pad (X). Pull Ball Head Pop Pin (85) on Chrome Back Pad Frame (U) as this will allow you to change to the desired angle.
- Release Ball Head Pop Pin (85) and make sure it is fully engaged into the selector hole.

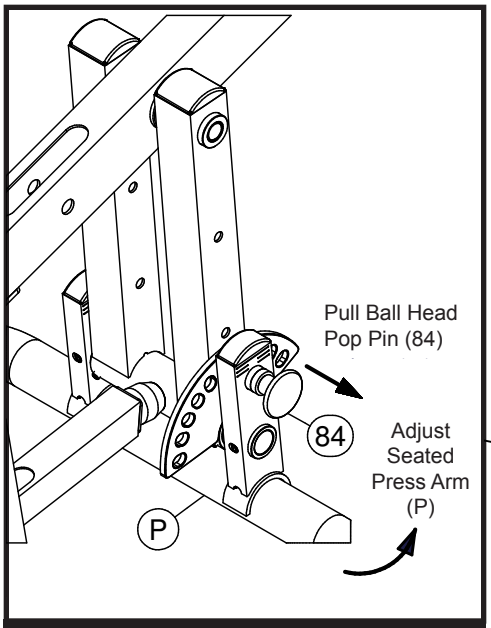

⚠ WARNING ⚠

Pay special attention to the plunger on Pop Pin (84). Always be sure that the plunger is **fully engaged** into the hole you select. Also, be sure that the spring in Pop Pin (84) operates freely. Failure to do so may result in death or serious injury.

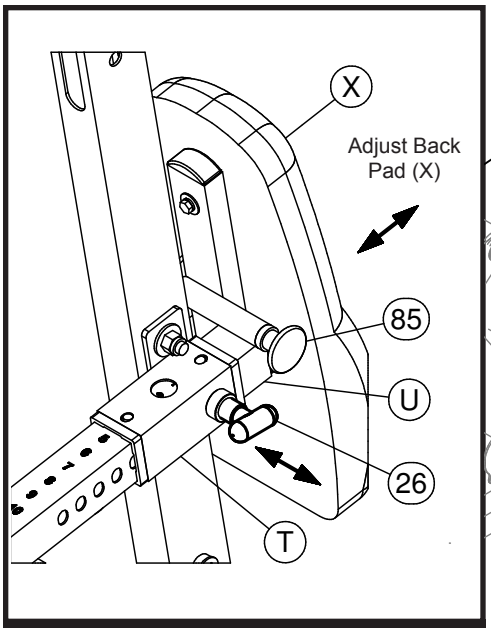

⚠ WARNING ⚠

Pay special attention to the plunger on Pop Pins (26) & (85). Always be sure that the plunger is **fully engaged** into the hole you select. Also, be sure that the spring in Pop Pins (26) & (85) operates freely. Failure to do so may result in death or serious injury.

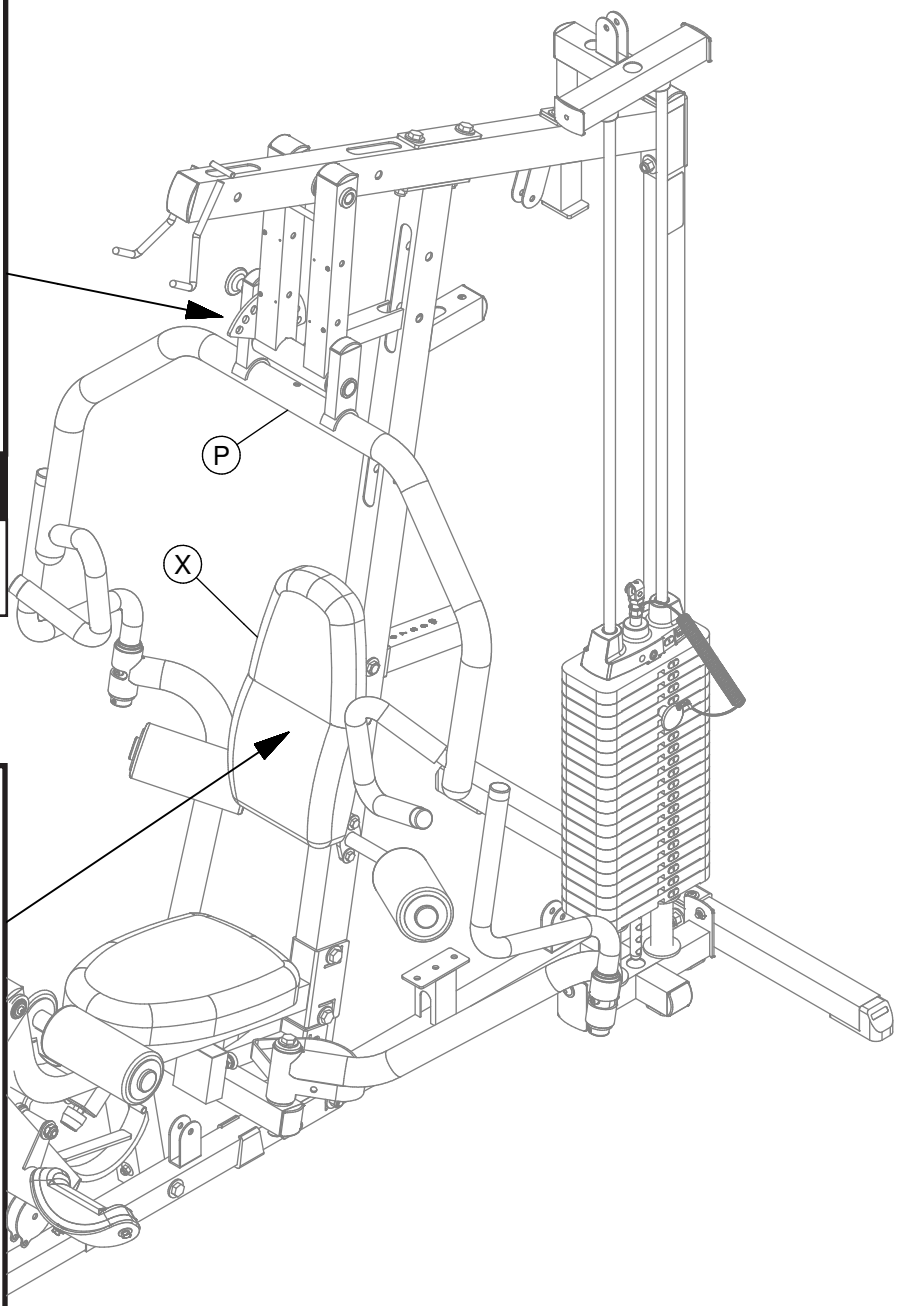

LEG EXTENSION SEAT PAD (ZB) ADJUSTMENT

- Grasp Leg Extension Seat Pad (ZB).
- Turn T-Shaped Pop Pin (26) in Leg Extension Frame (H) counter-clockwise to unlock it, and then pull T-Shaped Pop Pin (26) to release Leg Extension Seat Pad (ZB).
- Adjust Leg Extension Seat Pad (ZB) to the desired position.
- Release T-Shaped Pop Pin (26) and make sure it is fully engaged into the selector hole. Turn T-Shaped Pop Pin (26) clockwise to lock it in place.

FOOT PLATE (R) ADJUSTMENT

- Grasp Adjustable Chrome Frame (S).
- Turn T-Shaped Pop Pin (26) counter-clockwise to unlock it, then pull to release Adjustable Chrome Frame (S).
- Adjust to the desired position.
- Release T-Shaped Pop Pin (26) and make sure that it is fully engaged into the selector hole in Adjustable Chrome Frame (S). Turn T-Shaped Pop Pin (26) clockwise to lock it in place.

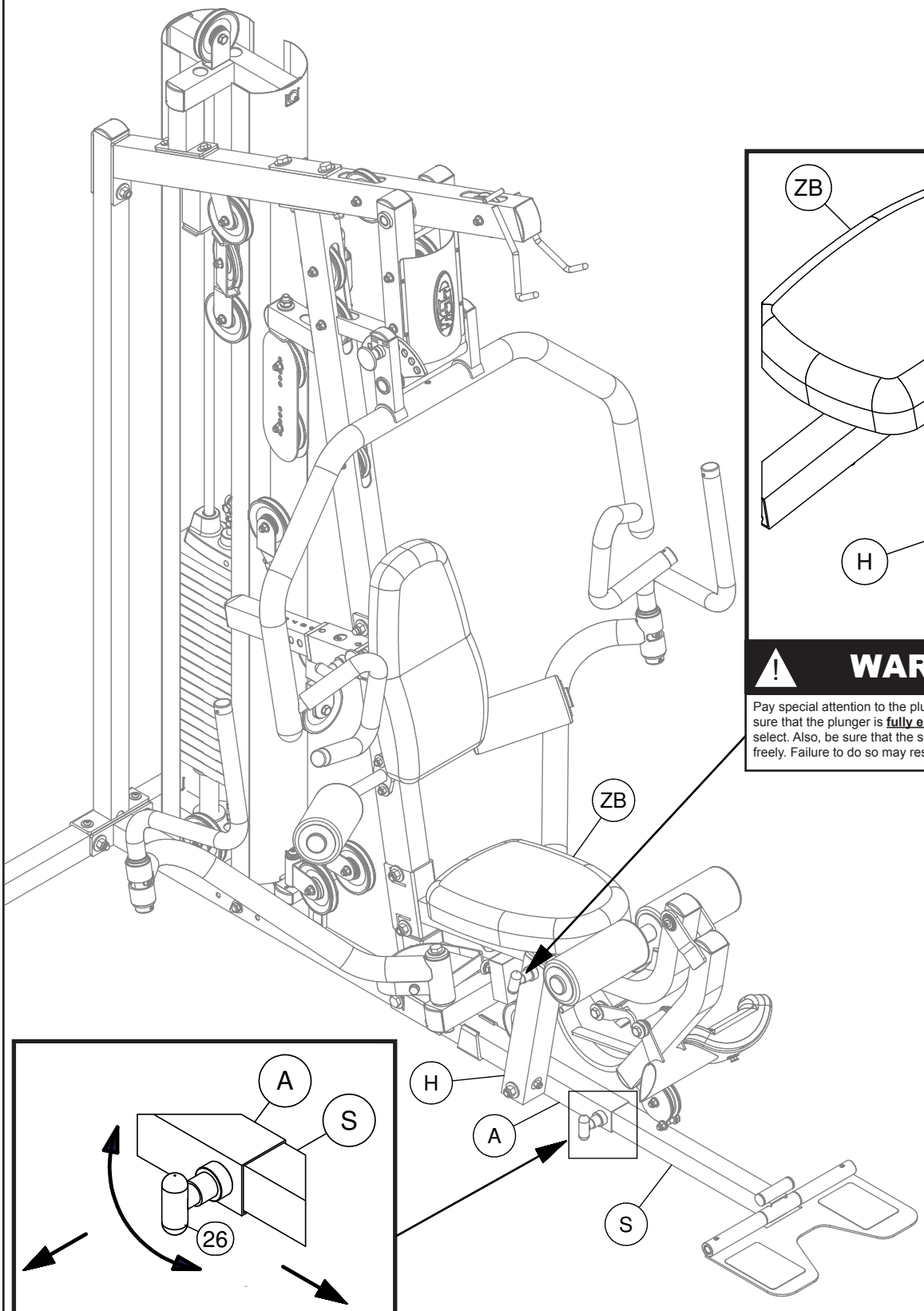

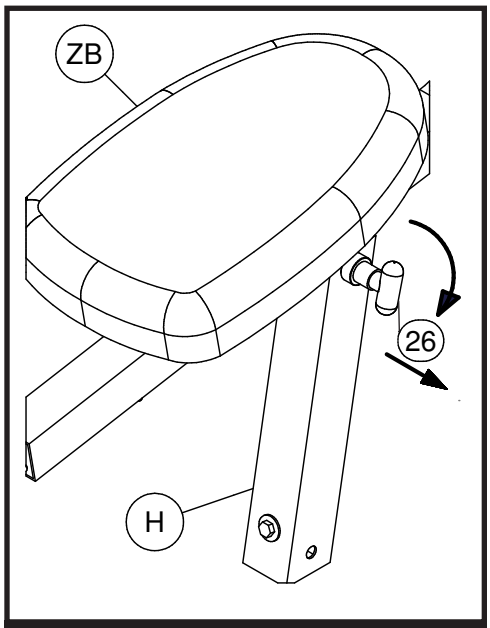

⚠ WARNING ⚠

Pay special attention to the plunger on Pop Pin (26). Always be sure that the plunger is **fully engaged** into the hole you select. Also, be sure that the spring in Pop Pin (26) operates freely. Failure to do so may result in death or serious injury.

⚠ WARNING ⚠

Pay special attention to the plunger on Pop Pin (26). Always be sure that the plunger is **fully engaged** into the hole you select. Also, be sure that the spring in Pop Pin (26) operates freely. Failure to do so may result in death or serious injury.

Accessory Installation

The G5S comes equipped with 4 accessories:
1) Ab/Tricep Strap
2) Low Row Bar
   Install End Caps (5) on Low Row Bar (71) as shown in the diagram.
3) Lat Bar
   Install End Caps (5) on Lat Bar (70) as shown in the diagram
4) Ankle Strap

The diagrams on the following page show the proper installation of the above accessories. Use the provided Snap Links to properly connect the accessories to your BodySolid gym.

A BodySolid Seat Band has also been included with the unit. The BodySolid Seat Band is installed by simply slipping it over the Seat Pad.

The G5S workout poster included with your machine is installed on the side of Rear Vertical Frame (C) as shown.
Simply peel off the sticker cover on Poster Clips (140) and place the evenly spaced Poster Clips (140) onto Rear Vertical Frame (C).
Finally, insert Poster (141) onto Poster Clips (140).

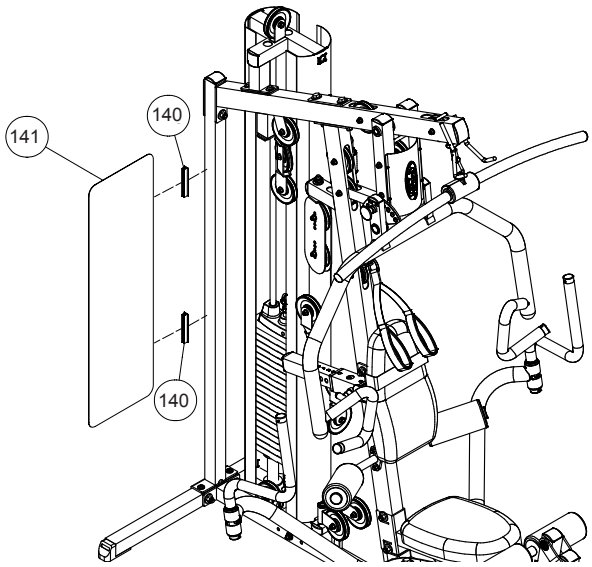

Congratulations! You are done. After assembly, you should check all functions to ensure correct operation. If you experience problems, first recheck the assembly instructions to locate any possible errors made during assembly. if you are unable to correct the problem, call the dealer from whom you purchased the machine or call 1-800-556-3113 for the dealer nearest you.

NOTE: If any bolts seem to loosen periodically, use Loctite 242 for a long-term cure.

This gym is capable of a variety of different exercises, as well as, smooth and user-friendly adjustment features. The following page of adjustments will help you to familiarize yourself with your new gym. We hope you are completely satisfied with this product and wish you many years of enjoyment.

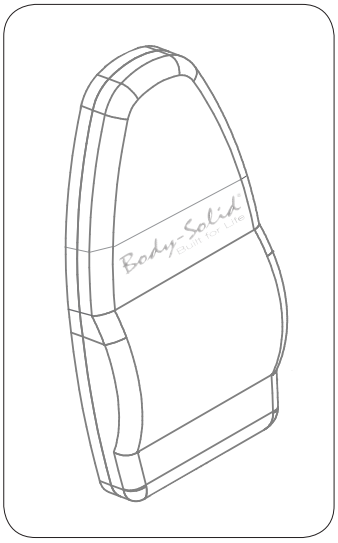

Diagram 1
Seat Band Installation

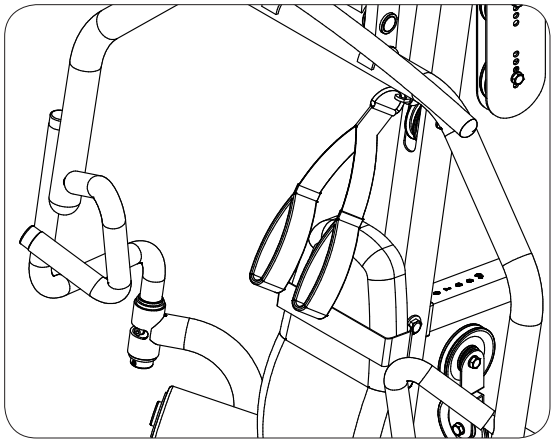

Diagram 2
Ab/Tricep Strap Installation

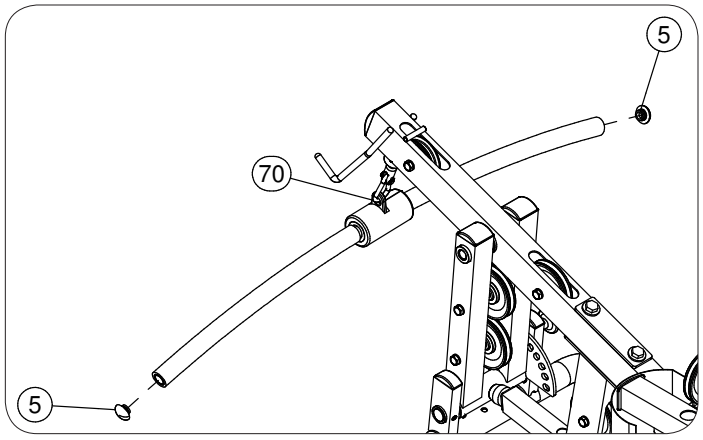

Diagram 3
Lat Bar Installation

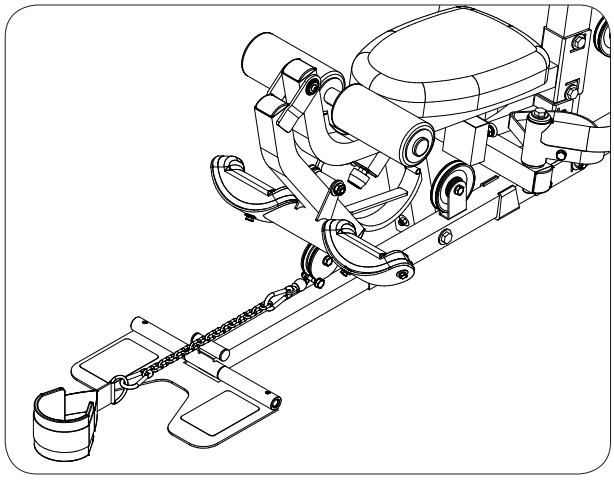

Diagram 4
Ankle Strap Installation

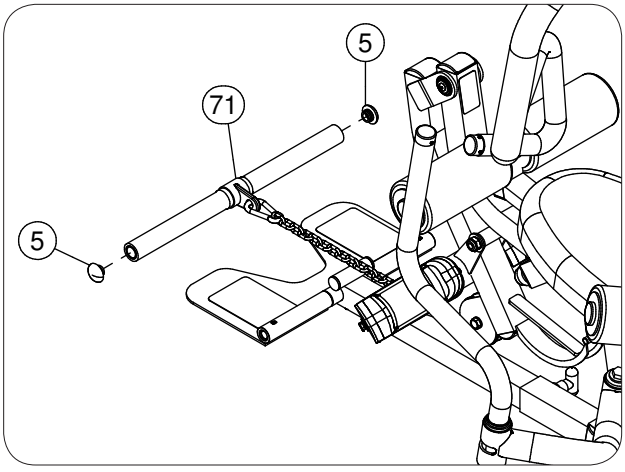

Diagram 5
Low Row Bar Installation

Be sure that all users carefully read and understand all warning, safety and maintenance labels on the machine before each use. Failure to do so may result in death or serious injury.

It is imperative that you retain this Owner's Manual and be sure all warning labels are legible and intact. Replacement Owner's Manuals and warning labels are available from your local Body-Solid dealer.

If you have any questions about the operation, set up or maintenance of this machine please call our customer service department at 1 (800) 556-3113.



Warning Label for Maintenance

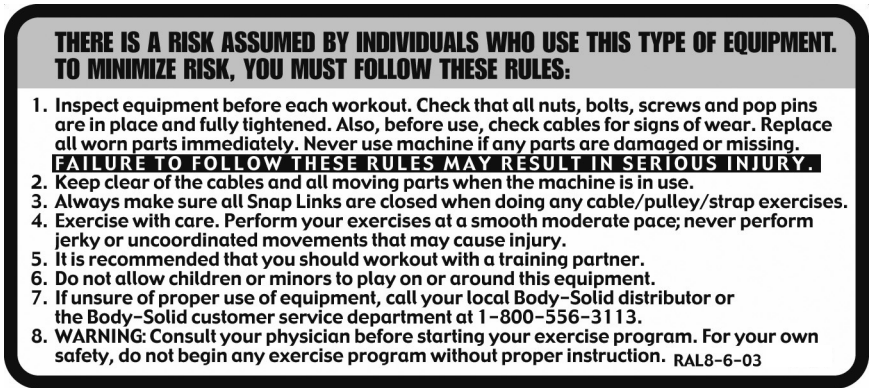

Warning Label for Rules

Although Body-Solid provides the highest quality of materials and workmanship in its products, the fact remains that component parts eventually wear out over time and with use. **This is particularly true with reference to pliable moving parts such as cables.** In spite of any expressed and/or implied warranties, intervening factors such as improper use, unusually heavy use, improper installation, improper alignment, poor maintenance, etc. serve to drastically reduce the usable life and safety of cables.

Be advised that dangerous conditions can arise even during warranty periods and that any expressed and/or implied warranties **Do Not Negate** the owner's responsibility to thoroughly, carefully and daily inspect all cables on this machine.

Serious injury can occur if you are struck by falling weights or moving parts. The risk that you assume by using this type of equipment can be reduced by following a few simple steps:

Cable inspection should be performed daily. Inspect all cables, the nylon coating on all cables and the area near the fittings at each end of each cable. **Replace any damaged or worn cables immediately.** Do not allow the machine to be used until damaged or worn cables are replaced.

Important: Cables are wear items. It is your responsibility to prevent unexpected breakage. The actual wire strands, the fittings and the nylon coating itself must all be scrutinized. Using or allowing a machine to be used with a suspect cable can result in death or serious injury.

The nylon coating on a cable is essential for cable life and safety. Visually inspect all cables and pulleys. Look at the cables as they travel around the cams and pulleys. A cable that is wearing may exhibit a "ballooned" or broken coating in the area that passes over the pulley. Damage to the coating is an early warning signal. A cable should be replaced if the nylon coating is missing, is damaged in anyway, has pulled or shrunk from the fittings at the end of the cables, or if it is discolored. Discoloration of the cable coating is an early indication of internal problems such as wear or fraying.

Annual cable replacement (semiannual in multi-user settings) is strongly recommended as an additional precaution. The rate at which cables wear depends on many factors including: number of users, number of repetitions, weight setting, misuse, abuse, etc. Because of this, periodic cable replacement is not a sufficient safeguard against unexpected breakage.

Nothing short of a thorough, careful, daily inspection constitutes an adequate safety program.

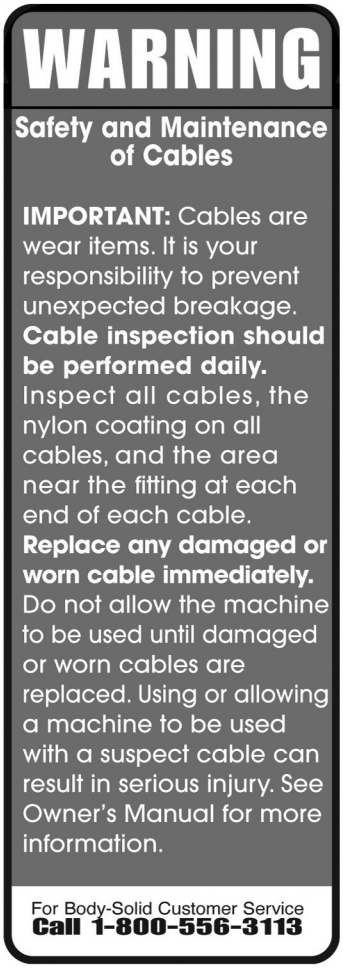

(153)

Precision craftsmanship assures Body-Solid's ability to consistently deliver products of the highest standards. Our products have been carefully designed to ensure safe, efficient long term operation.

However, it must be realized that safe use of this equipment requires that owners carefully read and follow the Body-Solid use recommendations, warnings, and maintenance guidelines in this Owners Manual.

Routine inspection and maintenance is of critical importance to ensure maximum safety and performance. Body-Solid uses the highest quality materials available, but wear is inevitable. Therefore, you must carefully inspect your equipment as outlined in the Maintenance Schedule.

Be advised that dangerous conditions can arise even during a warranty period. A warranty does not negate the owner's responsibility to thoroughly, carefully and daily inspect the machine.

Including maintaining the equipment, the owner's responsibility is also to:

- Be sure to always provide adequate supervision to all end-users.
- Be sure to instruct all end-users of proper usage.
- Be sure all supervisors and personal trainers who instruct end-users on equipment use are properly trained and know the function and importance of every adjustment and setting.
  Also, be sure these trainers provide proper instruction to end-users on the fundamentals of strength training.

CABLES:
- While the machine is not in use, carefully run your fingers along the cable to feel for thinning or bulging areas. Replace cables immediately at the first sign of damage or wear. Do not use equipment until damaged cable has been replaced.
- Visually inspect the cables for fraying, cracking, peeling or discoloration.
- Check slack in cables and re-adjust cable tension if needed.
- Check that the jam nut on the selector rod top bolt is tight.

UPHOLSTERY:
- Wipe down after every workout.
- Periodically take the time to use a mild soap or a mild vinyl upholstery cleaner. Avoid using any abrasive cleaner not intended for use on vinyl.
- Keep sharp or pointed objects out of your pockets and clear of all upholstery.

NUTS/BOLTS/FASTENERS:
- Periodically inspect all nuts and bolts. Tighten if needed. If bolts seem to loosen periodically, use Loctite 242 for a long-term cure.
- Go through a re-tightening sequence periodically to ensure that all hardware is properly tensioned.

GUIDE RODS:
- Wipe clean with a dust free rag. Lubricate with a Silicon or Teflon based lubricant.

ADJUSTMENTS / LOCKING PINS / TIGHTENING KNOBS:
- Check all pieces for signs of visible wear or damage.
- Check springs in Snap Links and Pop Pins for proper tension and alignment.
- If the spring sticks or has lost its rigidity, replace it immediately.

ANTI-SKID SURFACES:
- Replace if they appear worn or become slippery.

WARNING INSTRUCTION LABELS:
- Inspect and familiarize yourself with all safety warnings and other user information on decals.

MAINTENANCE SCHEDULE	DAILY	WEEKLY	LATEST DATE ENTRY						
CABLES: CHECK TENSION, END FITTINGS, AND COATING. CHECK THAT JAM NUTON THE SELECTOR ROD TOP BOLT IS TIGHT.	✔	✔							
UPHOLSTERY: WIPE DOWN AND DRY CLEAN AND CONDITION.	✔	✔							
FRAME: WIPE DOWN AND DRY POLISH/WAX	✔	✔							
CHROME: WIPE DOWN AND DRY POLISH/LUBRICATE	✔	✔							
NUTS/BOLTS/FASTENERS: TIGHTEN AND/OR ADJUST AS NEEDED		✔							
GUIDE RODS: LUBRICATE AND CLEAN		✔							
LINEAR RODS: LUBRICATE AND CLEAN		✔							
SEAT SLEEVES: LUBRICATE AND CLEAN		✔							
ADJUSTMENTS / LOCKING PINS / TIGHTENING KNOBS		✔							
WEIGHT STACK PINS		✔							
WARNING INSTRUCTION LABELS		✔							
SPRINGS / POP PINS	✔								
ANTI-SKID SURFACES		✔							
HAND GRIPS / ROLLERS		✔							

FOR BODY-SOLID CUSTOMER SERVICE:
1-800-556-3113

*Make several copies of this page to keep track of your maintenance.
You can print more copies of this page by going to:
http://www.bodysolid.com/support/docs.html

PHRASES, TERMS, TIPS & GUIDELINES



BEGINNER'S GUIDELINES

- Work out at least two times a week.
- Include six to eight exercises that train major muscle groups.
- Perform two or three sets of at least eight to 12 repetitions.

AEROBIC
Exercise that primarily uses oxygen to burn fuel at low to moderate levels of intensity. Running and jogging are examples of aerobic exercise.

ANAEROBIC
Exercise that primarily uses the body's stored fuel for energy. Intense weightlifting is an example of an anaerobic exercise.

ATROPHY
Decrease of a muscle caused by the decrease in the size of its cells because of inactivity.

BALLISTIC STRETCHING
A stretching technique that involves a bouncing or bobbing movement during the stretch. The final position is not held. This is not a recommended stretching technique.

BREATHING
Never hold your breath during any part of an exercise. Holding your breath may cause severe intra-thoracic pressure and raise blood pressure leading to dizziness, blackout or other complications. The rule of thumb is to exhale on exertion and inhale on the return part of the exercise.

CARDIOVASCULAR
Referring to the heart, lungs, and other periphery systems involved in the transport of oxygen throughout the body.

CHALLENGE YOUR MUSCLES
All strength training should progress gradually, using increases in weight until your goals are reached. Then, change your workout to include increased reps or a higher weight resistance. Alter the order of your exercises, perform multiple sets or different exercises to maintain results or reach new goals.

CHANGE ROUTINE
Beginner's please note: If you want to make changes in the exercise routine that you do, wait until about the six to eight week point. Advanced lifters may want to change routines to avoid plateus in gaining size or strength.

CIRCUIT TRAINING
Exercise stations that consist of various combinations of weight training, flexibility, calisthenics, and aerobic exercise.

CONCENTRIC MUSCLE ACTION
The muscle shortens while contracting against resistance.

ECCENTRIC MUSCLE ACTION
The muscle lengthens while contracting against resistance.

EXERCISE FREQUENCY
Exercise each muscle group 2-3 times per week. Allow a minimum of 48 hours rest for each muscle group worked. If you are doing a total-body workout, three training sessions per week, performed on every second day, is adequate.

EXERCISE LARGE MUSCLES FIRST
You should work your large muscle groups first (ie. squat, bench press, lat pulldown) before you exercise your small muscle groups (ie. bicep curls, tricep pressdowns, lateral raises).

EXERCISE PROGRAM DURATION
A weight training routine should take anywhere from 45 minutes to one hour to complete. Add another 20 to 60 minutes when you include stretching, warm-up, aerobics and cool-down.

GIVE YOUR MUSCLES A REST
You'll get the most out of strength training if you give your muscles at least 48 hours rest to recover and rebuild between strength training workouts.

HYPERTROPHY
Enlargement of a muscle caused by an increase in the size of its cells in response to weight training.

INTENSITY
The degree to which the body is worked during exercise.

ISOKINETIC EXERCISE
Resistance is given at a fixed velocity of movement with accommodating intensity. A machine that moves you through an entire range of motion at a preset speed and will not change no matter how much pressure is put forth by the individual.

ISOMETRIC EXERCISE
Contracts the muscle statically without changing its length. Example: Attempting to lift a weight heavier than you can handle, but cannot move.

ISOTONIC EXERCISE
Shortens and lengthens the muscle through a complete range of motion. This defines weight training with full range of motion.

MUSCLE FATIGUE
Fatigue is when you can't possibly do another rep without sacrificing form.

MUSCULAR ENDURANCE
The ability to perform repetitive muscular contractions against some resistance.

MUSCULAR STRENGTH
The maximum force that can be applied by a muscle during a single maximum contraction.

OSTEOPOROSIS
A decrease in bone density.

PLYOMETRIC EXERCISE
A technique that includes specific exercises which encompass a rapid stretch of a muscle eccentrically, followed immediately by a rapid concentric contraction of that muscle for the purpose of facilitating and developing a forceful explosive movement over a short period of time. Examples of these are using medicine balls for upper extremity and depth jumping for lower extremeity.

PHRASES, TERMS, TIPS & GUIDELINES

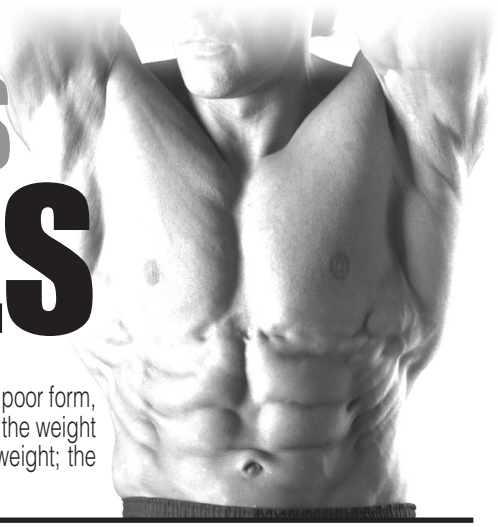

STARTING RESISTANCE LEVEL

If you begin weight training at too high a level, you risk serious injury. You will also develop poor form, which will hinder your efforts and discourage you. Use this as a guideline: if you cannot lift the weight eight times with proper form, the weight is too heavy. Similarly, don't choose too light a weight; the last two or three repetitions of your set should be difficult.

POWER
Power is the rate of performing work. Power during a repetition is defined as the weight lifted times the vertical distance the weight is lifted divided by the time to complete the repetition. Power during a repetition can be increased by lifting the same weight the same vertical distance in a shorter period of time. Power can also be increased by lifting a heavier resistance the same vertical distance in the same period of time as a lighter resistance.

PROGRESS GRADUALLY
Increase reps before increasing resistance. Reduce rest intervals between sets to increase intensity.

PROGRESSIVE RESISTANCE
The principle of continually adding more weight to a specific exercise as your muscles become stronger to adapt to the heavier weights.

PROPER FORM
Focus on the proper motion of the exercise and concentrate on the specific muscles being used. Do not sacrifice proper form to lift heavier weight or to perform more repetitions. Proper form also means lifting in a smooth, fluid motion. If you feel strain elsewhere, you should re-evaluate the amount of weight you are lifting or have a qualified professional critique your exercise motion.

PROPER POSTURE
Maintaining proper posture will greatly reduce chances of injury and maximize exercise benefit. When standing always keep your feet shoulder-width apart. Do not lock your knees. Locking your knees can put unnecessary strain on them. Keep your back flat and straight, making sure not to twist or arch it in order to complete a repetition.

PROPER TECHNIQUE
To get the most out of strength training and to reduce the chance of injury, use proper weight training techniques. These include working your muscles through their full range of motion (but not locking any joints), lifting at a speed at which you can control the weight and stop easily if necessary.

RANGE OF MOTION
Moving through a complete range of motion (ROM) allows the muscles to stretch before contraction and increases the number of muscle fibers being recruited. This produces maximum contraction and force. By working the full ROM, flexibility will be maintained and possibly increased.

REPETITION
A repetition is one complete movement of an exercise. It normally consists of two phases: the concentric muscle action, or lifting of the resistance, and the eccentric muscle action, or lowering of the resistance.

REPETITION MAXIMUM (RM)
This is the maximum number of repetitions per set that can be performed at a given resistance with proper lifting technique. Thus, a set at a certain RM implies the set is performed to momentary voluntary fatigue. 1RM is the heaviest resistance that can be used for one compete repetition of an exercise. 10 RM is a lighter resistance that allows completion of 10 (but not 11) repetitions with proper exercise technique.

REST INTERVAL
Allow a brief pause between sets to give your muscles a chance to partially recover before working them again. For power and muscle size development allow a 3 to 4 minute rest interval between sets. For muscular endurance and definition allow a 30 second rest interval. For strength training allow a 60 to 90 second rest interval.

RISK SHOULD NOT EXCEED BENEFIT
If the risk of a specific exercise exceeds its potential benefit, it is best to stay on the conservative side. There are several ways to work specific muscle groups. Choose those that provide minimal risk. Ask a fitness professional for guidance.

ROUTINE
The specific exercises, sets, reps and weight for a specific body part.

SET
This is a group of repetitions performed continuously without stopping. While a set can be made up of any number of repetitions, sets typically range from 1 to 15 repetitions.

SMALL MUSCLE GROUP EXERCISE
Single joint movement and isolation exercises (i.e. bicep curls, tricep pressdowns and leg extensions).

SPEED OF MOVEMENT
Strength training movements should be slow and controlled. Do not use momentum to complete an exercise movement. Momentum puts unnecessary stress on tendons, ligaments and joints. Using momentum in your exercise movements does not develop increased strength.

STATIC STRETCHING
A stretching technique that involves holding a specific muscle or muscle group at a desired length for a certain period of time. This type of stretching is highly recommended.

STOP TRAINING IF YOU FEEL PAIN
If you feel pain during a specific exercise stop immediately. Any continuation may aggravate an existing injury. Re-evaluate your routine to make sure that you are doing a proper warm up. Decrease the amount of weight you are lifting. Talk to a qualified personal trainer, health professional or your doctor.

STRENGTH
Strength is the maximal amount of force a muscle or muscle group can generate in a specified movement pattern at a specified velocity of movement.

WARM UP
This cannot be stressed enough. Many workout-related injuries can be avoided by a proper warm up routine. Try to do a total body warm up before you start training. A good example of a total body warm up is using a stationary bike, treadmill, elliptical, rowing or skiing machine. It is especially important to warm up specific muscle groups you are going to be using. Your muscles need a 5 to 15 minute warm up as well as a brief cool down. This can be as simple as performing a warm up set of high repetitions and light weight (25% to 50% of your training weight) for each exercise.

WORKOUT
The routine, specific exercises, weights, sets, and reps for one or more body parts.

NUTRITION



Good nutrition is a diet in which foods are eaten in proper quantities and with the needed distribution of nutrients to maintain good health. Malnutrition, on the other hand, is the result of a diet in which there is an underconsumption, overconsumption, or unbalanced consumption of nutrients that leads to disease or an increased susceptibility to disease. What is stated in the above definitions is the fact that proper nutrition is essential to good health. A history of poor nutritional choices will eventually lead to poor health consequences.

There are many substances necessary for the proper functioning of the body. Nutrients are the substances that the body requires for the maintenance of health, growth, and to repair tissues. Nutrients can be divided into six classes: carbohydrates, fats, proteins, vitamins, minerals and water. Carbohydrates, or "carbs", are nutrients that are composed of carbon, hydrogen and oxygen, and are essential sources of energy in the body. Grains, vegetables, and fruits are excellent sources of carbohydrates. It is recommended that at least 55% to 60% of the total number of calories consumed come from carbohydrates (American Diabetes Association, Diabetes & Exercise, 1990). It is further recommended that 10% or less of the total calories consumed come from simple sugars like a candy bar.

One of the many benefits of consuming foods that are high in complex carbohydrates, such as rice, pasta, and whole grain breads, is that they also typically contain dietary fiber. Dietary fiber is a term used when referring to substances found in plants that cannot be broken down by the human digestive system. Although fiber cannot be digested, it is important in helping to avoid cancers of the digestive system, hemorrhoids, constipation, and diverticular disease because it helps food move quickly and easily through the digestive system. It is recommended that people consume 20 to 30 grams of fiber per day (American Diabetes Association, Diabetes & Exercise, 1990). Excellent sources of dietary fiber are grains, vegetables, legumes, and fruit.

Fats are an essential part of a healthy diet and serve vital functions in the human body. Among the functions performed by fats are temperature regulation, protection of vital organs, distribution of some vitamins, energy production, and formation of component parts of cell membranes. Like carbohydrates, fats are composed of carbon, hydrogen, and oxygen. However, their chemical structure is different.

Both animals and plants provide sources of fat. Saturated fats come primarily from animal sources and are typically solid at room temperature. Plant sources of saturated fats are palm oil, coconut oil, and cocoa butter. A high intake of saturated fats is directly related to increased cardiovascular disease. Unsaturated fats are typically liquid at room temperature. Corn, peanut, canola, and soybean oil are sources of unsaturated fats. It is recommended that no more than 30% of one's diet be composed of fats. Ten percent or less of the total calories consumed should come from saturated fats. One way to reduce saturated fat intake would be to substitute margarine for butter.

Proteins are substances composed of carbon, hydrogen, oxygen, and nitrogen. Proteins are made by combining amino acids. Amino acids are nitrogen-containing building blocks for proteins that can be used for energy. Amino acids can combine in innumerable ways to form proteins, and it is estimated that tens of thousands of different types of proteins exist in the body. It is the ordering of the amino acids that provides the unique structure and function of proteins.

There are proteins in both meat products and plant products. Animal sources of protein such as milk, meat and eggs contain the eight essential amino acids (amino acids that the body cannot synthesize and therefore must be ingested). Plant sources of protein such as beans, starchy vegetables, nuts, and grains do not always contain all eight amino acids. Because of this, vegetarians must consume a variety of protein-containing foods. It is recommended that proteins make up 10% to 15% of one's daily calories. This will ensure adequate protein for growth, maintenance, and the repair of cells. Protein requirements for adults are not as high as those recommended for infants, children, and young adults. Note: individuals who are training intensely will have an increase in their protein requirements.

Vitamins are organic substances that are essential to the normal functioning of the human body. Although vitamins do not contain energy to be used by the body, these substances are essential in the metabolism of fats, carbohydrates and proteins. Because of the critical role vitamins play, it is necessary that they exist in proper quantities in the body.

Minerals are inorganic molecules that serve a variety of functions in the human body. The minerals that appear in the largest quantities (calcium, phosphorus, potassium, sulfur, sodium, chloride, and magnesium) are often called macrominerals. Other minerals are also essential to normal functioning of the body, but because they exist in smaller quantities (chromium, iron, copper, fluoride, iodine, manganese, molybdenum, selenium, and zinc) they are called microminerals.

A mineral that is often consumed in inadequate amounts by Americans is calcium. Calcium is a mineral important in the mineralization of bone, muscle contraction, and the transmission of nerve impulses. Osteoporosis is a disease characterized by a decrease in the total amount of bone mineral in the body and by a decrease in strength of the remaining bone. This condition is most common in the elderly but may also exist in younger people who have diets inadequate in calcium or vitamin D or both.

Iron is another mineral that is often underconsumed by Americans. This is especially true of women. The oxygen-carrying properties of hemoglobin (blood) depend on the presence of iron. Anemia is a condition characterized by a decreased capacity to transport oxygen in the blood, and is also common in those lacking a sufficient amount of iron intake. Red meat and eggs are excellent sources of iron. Additionally spinach, lima and navy beans, and prune juice are excellent vegetarian sources of iron.

Sodium, on the other hand, is a mineral that many Americans over-consume. High sodium intake has been linked with hypertension, as well as high blood pressure. People can substantially reduce their sodium intake by limiting consumption of processed foods and decreasing the amount of salt added to foods when cooking.

In conclusion...don't forget hydration. Water is considered an essential nutrient because of its vital role in the normal functioning of the body. Water contributes approximately 60% of the total body weight and is essential in creating an environment in which all metabolic processes occur. Water is necessary to regulate temperature and to transport substances throughout the body.

FOLLOW THESE BASIC NUTRITIONAL GUIDELINES FOR GAINS IN STRENGTH AND LEAN MUSCLE MASS:

1. **Choose your foods carefully. Try getting your carbohydrates from sources such as rice, vegetables, beans, whole grains, pasta and fruit. Good protein sources include fish, chicken, turkey, lean meat and low-fat or nonfat dairy products.**
2. **Minimize your fat intake.**
3. **Drink a minimum of 10 eight-ounce glasses of water each day.**
4. **Eat four to six small meals a day, about three hours apart. Small meals are more easily digested and result in greater nutrition absorption.**
5. **Avoid eating junk food and fast food.**
6. **Time your protein intake of 40-55 grams approximately 75 minutes after your workout.**
7. **Immediately following your workout, replenish your glycogen stores with approximately 50-75 grams of carbohydrates.**

For more information on nutrition visit your local library or book store. There are many excellent books available.

EXERCISE PRESCRIPTION



Sets

Sets are defined as a combination of any number of reps of one exercise. The number of sets used in a workout is directly related to training results. Typically, two to three sets are used by intermediate and advanced lifters to achieve optimum gains in strength. Experts agree that multiple-set systems work best for the development of strength and muscular endurance. Gains will be made at a faster rate by using a multiple-set system than gains achieved through a single-set system. The use of a single set of an exercise is recommended and very effective for individuals who are untrained or just beginning a resistance training program. One-set programs might also be used for simple maintenance once you are in shape. It is important to note that low-volume set programs will increase strength in untrained individuals, but more complex physiological adaptations, such as gains in muscle mass, tone, size, and performance usually requires higher-volume set training for the best results. Multiple sets of an exercise present a more intense training stimulus to the muscles during each set. Once your desired initial fitness level has been achieved, multiple-set performances of the exercise using the proper resistance (with specific rest periods between sets) will take you to the next level of strength training, endurance, and muscular development.

Resistance Used

The amount of resistance used for a specific exercise is probably the most important variable in resistance training. When designing a resistance training program, a weight for each exercise must be chosen. The use of repetition maximums (RM): the exact resistance that allows only a specific number of repetitions to be performed, is probably the easiest method for determining a resistance. Typically, one uses a training RM target or a RM target zone. Example: If your RM zone is 8 to 12 repetitions and you cannot lift the weight at least 8 times using proper form, the weight is too heavy. On the other hand, if you can easily lift the weight 12 times, the weight is too light. In either case, the weight needs to be changed. As the strength level of the lifter changes over time, the resistance is adjusted so a true RM target or target zone resistance is used.

Rest Periods Between Sets and Exercises

One frequently overlooked variable in exercise prescription is the length of the rest period between sets and between different exercises. Your desired fitness goals will normally determine the amount of time you allow your body to rest. Exercises involving high repetitions (15 to 20) and a high number of sets (3 to 4) with short rest periods (30 seconds) between sets will raise metabolic demands. This in turn will burn excess body fat and increase muscular endurance. Short rest periods are a characteristic of circuit weight training, and the resistances used are typically lighter. This type of workout is best for trimming body fat and toning muscle. Exercises with heavier resistance and fewer sets usually have a longer resting period between sets. The results of using this method are normally increased muscular strength and mass. If the desired outcome is to gain overall muscle mass, your exercise prescription should lean toward a higher weight resistance doing 2 to 6 repetitions per set, with a rest period of 3 to 4 minutes between each set.

Rest Periods Between Workouts

The amount of rest between training sessions depends on the recovery ability of the individual. Most experts agree that three workouts per week with one day of rest between sessions allows adequate recovery, especially for the beginner. If the resistance training is not excessive, only moderate amounts of delayed muscular soreness should be experienced one day after the session. As the lifter advances and his or her body is better able to tolerate and recuperate from the resistance exercise sessions, the frequency of training can be increased. Well-conditioned athletes may be capable of, and need training frequencies of 4 to 5 days in a row to improve significantly and achieve their desired goals. When consecutive-training-day sequences are used, it is usually beneficial to do different exercises for the same muscle groups and use different resistances for the exercises. When training is performed on consecutive days, it often involves the use of a split routine (different body parts exercised each day), or a split program (different exercises for the same body part performed each day). There are many books available at the library or your local book store for the intermediate and advanced weight training enthusiast. It is also recommended that you work with a qualified personal trainer to achieve your ultimate goals.

Order of Exercise

Leaders in the field of strength and conditioning believe that working the larger muscle groups first (chest, back, legs), should take priority over training the smaller muscle groups (biceps, triceps, deltoids, calves). The reason behind this exercise order is that the exercises performed in the beginning of the workout are the ones that are going to require the greatest amount of muscle mass to perform. Hence, exercising the smaller muscle groups first will deplete the body of the energy necessary to stimulate the larger muscle groups. Arm-to-leg ordering allows for some recovery of the arm muscles while the leg muscles are exercised. “Stacking” exercises is a common practice among body builders as a way to attempt to bring about muscle hypertrophy. Stacking is loading up different exercises on the same muscle group (ie. standing bicep curls, preacher curls, one arm concentration curls). The exercise order will have a significant impact on the training stimulus stress level in a training session.

Scheduling Training

Finding the time to do it is one of the most difficult aspects of a training program. Once you have established a time to workout you should plan a training routine based on what muscles to involve on which day. As previously discussed, the larger muscle groups such as the chest, back, and legs should take priority over working the smaller muscle groups. Give your muscles at least 48 hours (but no more than 72 hours) of rest in between sessions.

TRAINING TIPS
FOR BEGINNER'S

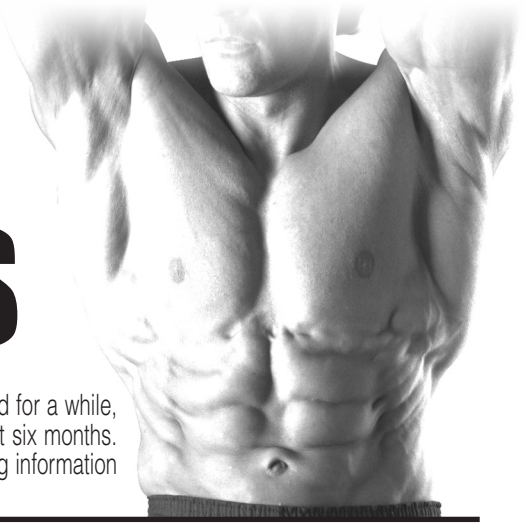

ARE YOU A "BEGINNER"?

A beginner can be classified as someone who has never touched a weight, may have lifted for a while, but has taken a substantial amount of time off, or has not consistently trained over the last six months. If you happen to fall into any of these categories, pay close attention, because the following information will be detrimental to the start of your training program.

As a beginner, one of the most common mistakes is doing too much. Because beginners often make good gains quickly, many fall into the trap of thinking that more is better. This may be true later in the training equation, but not for the novice. Some of the most common injuries occur as a result of taking on too much, too soon.

One of the questions most frequently asked is, "How much weight should I use?" Determining the weight for each exercise will vary from person to person. The weight for each exercise will be lifted in sets and repetitions. Repetition is defined as one execution of any exercise. A set is a combination of any number of repetitions of one exercise.

Experimentation at each exercise station is a good technique for determining the starting weight for an individual. Take the chest press exercise for example. Performing this exercise with a weight that can be pressed 30 times with ease will not help you achieve any particular goals. Adding the appropriate amount of weight that will allow you to perform a maximum of 8 to 12 repetitions will help you obtain the results you desire.

On the other hand, if you put too much weight on the press bar and press it 4 or 5 times, then common sense will tell you to reduce the weight, wait a few minutes, then try again. Remember, never sacrifice perfect form just for the sake of lifting heavier weight. This is a sure-fire, one-way trip down the road to injury. Making muscles work hard, with proper form is the name of the game.

Now that you understand how to test each station for your starting amount of resistance, you should know which muscles to train first. Training the large muscles groups first, such as your chest, legs, and back, should be done before training your small muscle groups like the arms, shoulders, and calves.

Starting with the large muscle groups will help you achieve and maintain quicker gains. The large muscles groups will require more stimulation and a higher intensity level than the smaller muscle groups. Training your arms with all-out intensity and training your chest immediately afterwards will not leave you with enough energy necessary to properly stimulate the muscle fibers in your chest. Moreover, because the triceps are required in chest press movements, your arm muscles will fail much more quickly than your chest muscles, which will also hold back your chest training.

As a beginner, you will find that your gains will come quickly. The excitement and enthusiasm that comes with these gains may cause you to spend even more time on your gym. Take it easy! Remember, just as too little exercise won't stimulate muscle growth...too much exercise won't either.

You need to give your body plenty of rest, especially if you're still sore from the last workout. This will keep you fresh and growing stronger. **NEVER TRAIN A BODY PART THAT IS STILL SORE FROM THE PREVIOUS WORKOUT.** Performing some flexibility exercises is a good way to keep the blood flowing through the sore area, but do not train these muscles again until you are feeling recovered.

Speaking of soreness, there is something else that you, as a beginner, should be aware of: If you work out - your muscles will get sore. The majority of muscle soreness comes from microtears and a build up of lactic acid in the muscle fibers. This is the result of intense exercise. Muscle soreness can become a problem when the body is pushed too fast and too quickly. As a beginner, tendons, ligaments, joints and tissues have not yet developed the ability necessary to recover from high intensity exercise. A general warm up of stretching and light calisthenics prior to exercise can possibly reduce the amount of post-exercise muscle soreness. A good cool down of stretching and cardio work may also decrease muscle soreness.

Now that we have laid a good foundation of the "do's and don'ts", let's get into something a little more specific. The Beginner's Strength Training Program. One of the best beginner's programs is the three-days-a-week routine. For example, do a whole-body workout on Monday, Wednesday and Friday. Use the other days for rest and recuperation. As previously discussed, you want to start with the large muscle groups first, then move on to the small muscle groups. Perform one exercise per muscle group that consists of 2 or 3 sets of 8 to 12 repetitions. Follow this routine for at least six to eight weeks in order for your body to establish the proper stimulation for growth.

One or two exercises per muscle group may not sound like enough to produce any results, but if you're a beginer - it most definitelty will. As you conitinue to train and your body adapts to your exercise routine and recuperative demands you place upon it, you'll be able to add more sets and exercises to your routine.

Another point that is highly recommended is the assistance of a personal trainer. Through the use of a personal trainer you can learn the mechanics and techniques of exercise, how to use proper form to avoid injury and details on proper nutrition. A good trainer will also provide MOTIVATION.

When choosing a personal trainer, here are some tips: Choose an individual that is certified through an accredited association. This is a good way to ensure that he or she is qualified to give you what you need. Also, take a look at what kind of shape they are in. If you want to be in great shape, look for a trainer who is in great shape. They will know what it takes to get results. Here are a few recommended organizations:

- National Strength & Conditioning (719) 632-6722
- American College of Sports Medicine (317) 637-9200
- National Academy of Sports Medicine (312) 929-5101

SAMPLE WORKOUT ROUTINE WHEN TRAINING FOR STRENGTH

Exercises	Reps	Sets
Leg Press / Squat	8 to 12	2 or 3
Leg Extension	8 to 12	2 or 3
Leg Curl	8 to 12	2 or 3
Calf Raise	8 to 12	2 or 3
Bench / Chest Press	8 to 12	2 or 3
Incline Press	8 to 12	2 or 3
Incline Pec Fly	8 to 12	2 or 3
Lat Pulldown	8 to 12	2 or 3
Seated Row	8 to 12	2 or 3
Military Press	8 to 12	2 or 3
Upright Row	8 to 12	2 or 3
Bicep Curl	8 to 12	2 or 3
Tricep Pressdown	8 to 12	2 or 3
Tricep Extension	8 to 12	2 or 3
Resistance Ab Crunch	20 to 30	2 or 3
Resistance Oblique Crunch	20 to 30	2 or 3

Rest period between sets should be about 60 to 90 seconds.

COMMON TRAINING MISTAKES



1. Lack of Adequate Warm-Up and Inadequate Flexibility

A warmed muscle is a more flexible muscle that's better able to lift heavier weights and work in a full range of motion. Those warmed muscles also greatly reduce your chance of training injuries.

2. Improper Form

The use of improper form is a good way to keep you out of the gym. Not only does improper form cause injuries, it also doesn't allow for adequate muscle-fiber stimulation.

3. Too Much Weight

Overloading the muscles is a good way to promote muscular growth, but packing on too much weight can cause a snowball effect of improper form, injuries, and down time from your routine.

4. Not Enough Weight

Not lifting enough weight will prohibit the stimulation necessary for muscular growth. Keep challenging yourself to lift heavier weights on a progressive basis always maintaining proper form.

5. Not Enough Rest Between Workouts

If you're still sore from your previous workout, you don't have to go back at it just because it's your scheduled day. Give your body an extra day off to fully recover so when you return you will be able to give 100%.

6. Overtraining

It's not how much time you spend working out, but what you accomplish that really matters. Try to keep your resistance workouts within 45 to 60 minutes per session.

7. Poor Diet and Supplementation

Eating the right combination of foods, along with good supplementation, will greatly promote your success. Make your diet 50 percent carbohydrate, 35 percent protein, 15 percent fat, and take a good multivitamin and protein / carbohydrate supplement. Don't forget the water- at least 80 ounces a day! Hydration is critical.

8. Stale Routines

Your body adapts very quickly to the demands placed upon it. That's why you should have a variety of exercises and routines that you can do. To keep your body growing, you've got to keep it off-guard. Changing your exercises and routines is a sure way to do it.

SETTING UP YOUR PERSONAL PROGRAM



It is important to first establish specific and realistic goals. You should determine your long term goal and then set a series of short term goals that will help you attain your long term goal. The most common goals are:



Muscular Endruance & Definition



Increase Strength



Increase Power & Muscle Mass

If your personal goals involve losing a considerable amount of body fat you will need to focus more on aerobic exercise and weight training for muscular endurance and definition. If your goals involve a large increase in muscle size you will need to focus on power and muscle mass weight training. Depending on your goals, you will have different nutritional requirements.

Once you have determined your personal goals, you will need to set up a schedule that helps you attain them. Set up a schedule that includes the number of workouts per week, the type of workout activity, the time of day for each workout, and the actual workout program. Don't forget to factor in the warm up and cool down periods. You may have to modify your current lifestyle to accommodate your new schedule. It's very important to include the following basic components to achieve successful results:



Stretching

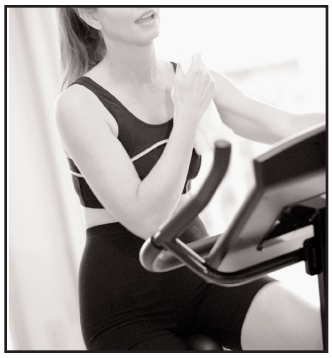

Aerobic Exercise



Weight Training

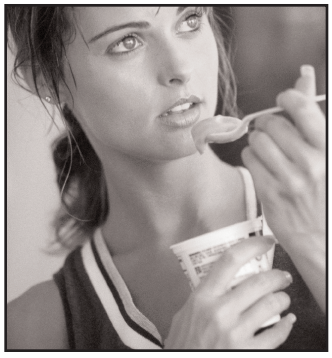

Nutrition

DETERMINE YOUR TRAINING METHOD



There are three basic types of weight training methods:

1. **Training for muscular endurance and definition**
2. **Training for strength**
3. **Training for power and muscle mass**

You should select a training method that reflects both your present fitness level and your long term goals. You should begin carefully and with proper professional guidance. You can always move from one training method to another as you progress.

If you are beginner, you should start slowly and carefully, gradually increasing the frequency and intensity of your training. Always play it safe – be realistic about your goals and your schedule. Realistic goals are safer and easier to follow.

Which is the right training method for you? First, take a look at your present physique and determine your objectives. Do you want a trim, toned, well-defined body? Are you involved in a sport where speed, strength and power are most important? Maybe you want bulging muscles and a terrific V-shape torso so you look great on the beach. Once you make a decision on what the final results should be, you can set up your personal program using the proper training method to achieve your goals.

Which training method is right for you?

FOR MUSCULAR ENDURANCE & DEFINITION

This training method incorporates achieving and maintaining a high cardiovascular (heart) rate and helps burn away excess fatty tissue. It also adds muscle definition and muscular endurance to your entire body. Exercises are most commonly performed for 15 to 20 repetitions and 3 to 4 sets using a light to moderate weight. The rest period between sets should be about 30 seconds. These short rest intervals will help maintain an elevated heart rate and prevent the muscles from cooling down.

FOR STRENGTH

This type of training is the most popular of the three and is designed specifically for increasing strength throughout the muscle and the muscle-tendon junction. This type of training is especially important for athletes. Normally, exercises are performed using moderate to heavy weight for 8 to 12 repetitions and 2 to 3 sets. The rest period between sets should be from 60 to 90 seconds. This allows a degree of muscle recovery before you hit them again.

FOR POWER AND MUSCLE MASS

This is the method most often used by bodybuilders and is recommended only for the intermediate and advanced lifter. The weights used are heavy — this shocks the muscles and stimulates a more rapid increase in muscle size. Usually exercises are performed for 2 to 6 repetitions and 3 to 4 sets using very heavy weight. The rest period between sets should be from 3 to 4 minutes. The prolonged rest periods allow ample time for recovery between sets.

DESIGNING YOUR PERSONAL ROUTINE

FIRST:

You need to decide which of the above training methods is best suited to accomplish your personal goals.

SECOND:

Study the exercise poster that came with your Body-Solid machine and select one or two exercises per body part (body parts are listed to the left of the exercise pictures). Be sure to include exercises for <u>all</u> body parts. If you leave out certain body parts your exercise routine and your body will not be balanced. If you are trying to increase muscle mass or increase strength to a muscle group it is alright to add extra exercises to the area you are particularly concerned about.

THIRD:

Coordinate your body part exercise program and your personal schedule. If you select one exercise per body part you can normally do your entire routine in the same workout. If you choose to do more than 12 exercises you may decide to divide your workout routine into upper and lower body exercises. You can split your schedule to work upper body one day and lower body the next day. Remember to rest each particular muscle group 48 hours before working it again.

FOURTH:

Order the exercises in your routine so you are working the large muscle groups first and the small muscle groups last.

FIFTH:

Keep a record! Write down the exercises, number of sets, number of reps and the amount of resistance (weight).

BEGINNER'S SAMPLE WORKOUT ROUTINE WHEN TRAINING FOR DEFINITION

Exercise	Reps	Sets
Bench / Chest Press	15 to 20	3 or 4
Lat Pulldown	15 to 20	3 or 4
Shoulder Press	15 to 20	3 or 4
Tricep Pressdown	15 to 20	3 or 4
Bicep Curl	15 to 20	3 or 4
Leg Press/Squat	15 to 20	3 or 4
Leg Extension	15 to 20	3 or 4
Leg Curl	15 to 20	3 or 4
Calf Raise	15 to 20	3 or 4

EXERCISE TIPS

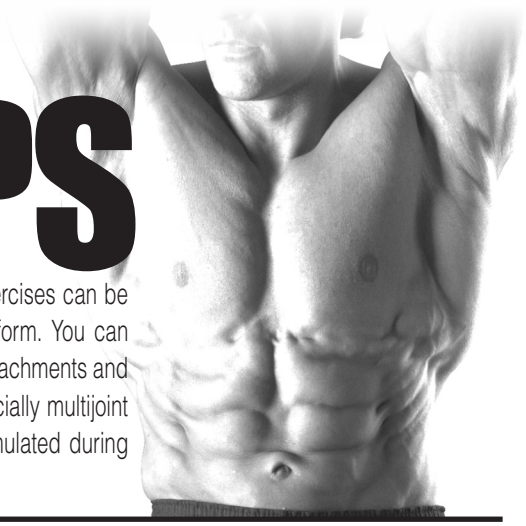

Listed below are Body-Solid's picks of the best exercises you can do for each body part. These exercises can be done using free weights, machines and multi-station gyms. Learn to do each exercise in proper form. You can make substitutions in your training and try variations of each using different Body-Solid grips, cable attachments and accessories to slightly change the emphasis of a particular exercise. Note: Many movements, especially multijoint exercises, work more than one muscle group. For example, your front deltoids and triceps are stimulated during bench / chest pressing movements.

CHEST

This powerful muscle group is the cornerstone of a well-developed upper body. To most thoroughly work your pecs, include both pressing and fly movements and vary the angle of the bench from decline to flat to incline.

BENCH / CHEST PRESS
INCLINE PRESS
DECLINE PRESS
PEC FLY
INCLINE FLY
DECLINE FLY
CABLE CROSSOVER
DIPS

SHOULDERS

The shoulder joint, which has the greatest range of motion of all joints in the body, is best worked by training all three deltoid heads. Include a pressing movement followed by a raise for each of the three heads.

SHOULDER PRESS
BEHIND THE NECK PRESS
FRONT DELTOID RAISE
LATERAL (SIDE) DELTOID RAISE
BENT-OVER LATERAL DELTOID RAISE
REVERSE PEC-FLY

UPPER BACK

A powerful upper back is marked by both middle-back thickness and width (the sought-after V-taper). This is best achieved by combining various rows with pull-downs and pull-ups. Remember to vary your grip to slightly change the stimulus.

PULL UP
UPRIGHT ROW
LAT PULLDOWN
SEATED ROW
BENT OVER ROW
HIGH ROW
REVERSE GRIP PULLDOWN

TRAPS

A signature muscle of a strong upper back, well-developed traps help prevent neck injury. Shrug movements should be done with heavy weights in a straight up-and-down motion.

STRAIGHT BAR SHRUG
DUMBBELL SHRUG
BEHIND THE BACK SHRUG
UPRIGHT ROW

LOWER BACK

Important not only for spinal protection but also because it's the seat of power for many exercises. If you spend a great deal of time crunching for abs, you need to balance your training for complete development and muscular balance.

PULL UP
UPRIGHT ROW
LAT PULLDOWN
SEATED ROW
BENT OVER ROW
HIGH ROW
REVERSE GRIP PULLDOWN

TRICEPS

This three-headed muscle on the back of your arm is involved in extension of the elbow. Like the biceps, the triceps cross the elbow and shoulder joints. Because of this, you can and should work the triceps through a variety of angles to ensure complete development.

LYING TRICEPS EXTENSION
CABLE TRICEPS EXTENSION
CABLE TRICEPS PRESSDOWN
CLOSE-GRIP BENCH PRESS
REVERSE-GRIP PRESSDOWN
TRICEPS PRESS
DIPS

BICEPS / FOREARMS

A two-headed muscle, the biceps' primary focus is to flex your elbow and supinate your wrist. The ability to build your biceps peak is largely genetic, but exercises that maximally stress the short head will help.

BICEPS
- **STANDING BICEP CURL**
- **SEATED BICEP CURL**
- **INCLINE CURL**
- **PREACHER CURL**
- **CONCENTRATION CURL**
- **ONE-ARM CABLE CURL**

FOREARMS
- **WRIST CURL**
- **REVERSE WRIST CURL**

ABDOMINALS

The rectus abdominus has upper and lower regions, but you can't isolate one area over the other. Still, include both upper and lower ab movement to more strongly emphasize those areas, and do twisting movements to work the obliques for complete development.

UPPER AB REGION
- **CABLE AB CRUNCH**
- **DECLINE BENCH CRUNCH**

LOWER AB REGION
- **REVERSE CRUNCH**
- **HANGING KNEE RAISE**
- **HIP THRUST**

OBLIQUES
- **CABLE SIDE BEND**
- **OBLIQUE CRUNCH**

THIGHS / GLUTES

The main muscles of the thighs are the quadriceps which are composed of four muscles. You have several others near the hip joint, including the body's largest muscle group, the gluteals. Multijoint movements (in which action occurs at both the hip and knee joints) are your best choice to work these muscles.

BACK SQUAT
FRONT SQUAT
LEG PRESS
LUNGE
REVERSE LUNGE
STEP-UP
LEG EXTENSION (does not work glutes)

HAMSTRINGS

On the back of the thighs, the hamstrings balance the quads and allow for a wide range of movement. Good exercise choices include those that work the hamstrings and both the hip and knee joints.

DEADLIFT
STIFF-LEGGED DEADLIFT
GOOD MORNING
LYING LEG CURL
SEATED LEG CURL
ONE-LEGGED STANDING LEG CURL

CALVES

Calves consist of two major muscles, the gastrocnemius and soleus. The latter is best worked when the knee is flexed, as in the seated calf raise.

STANDING CALF RAISE
SEATED CALF RAISE
DONKEY CALF RAISE
LEG PRESS CALF RAISE
HACK SQUAT CALF RAISE

ANATOMY CHART

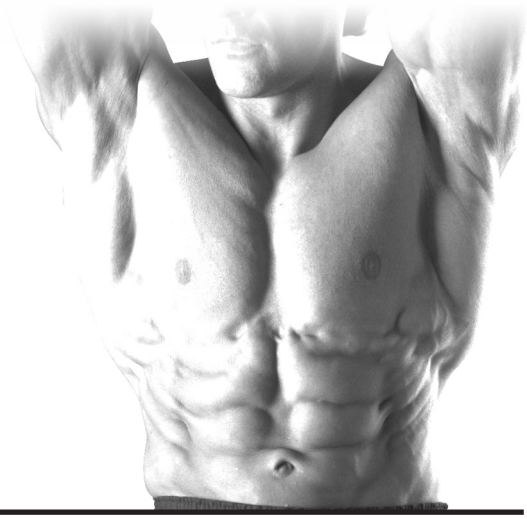

FRONT VIEW

Note: These illustrations depicting exaggerated musculature are not in the textbook anatomical position. As such, they are inexact for medical purposes but are useful for a general understanding.

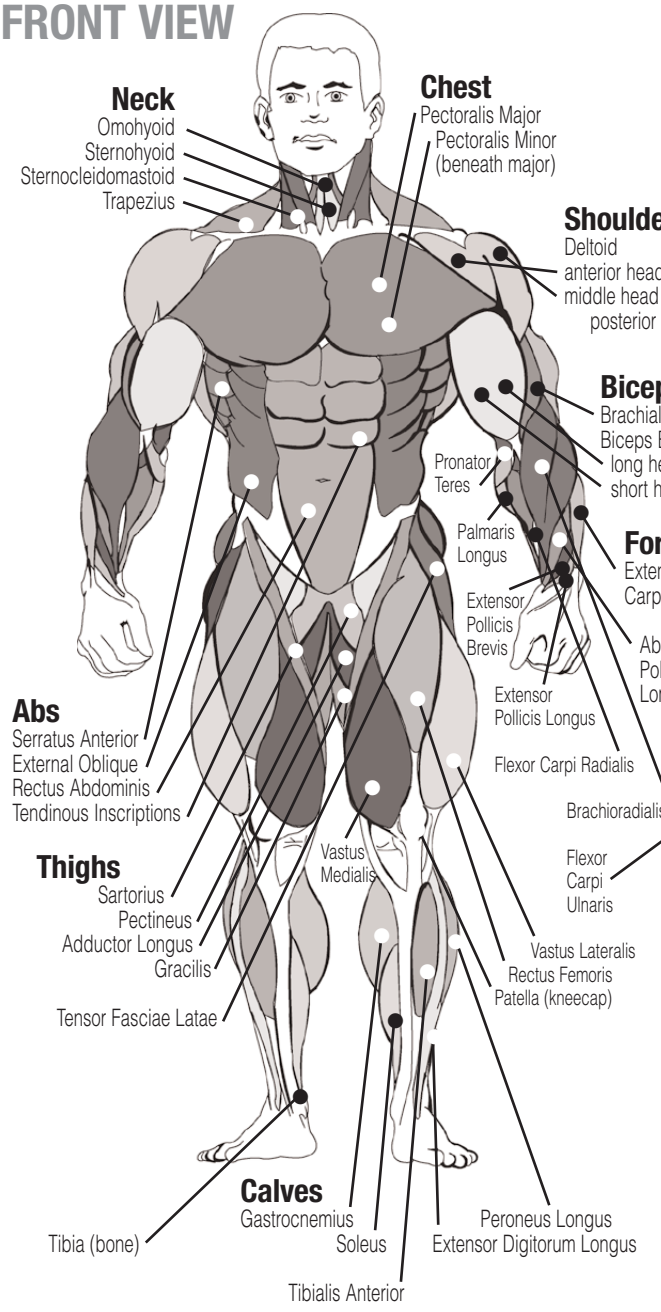

BACK VIEW

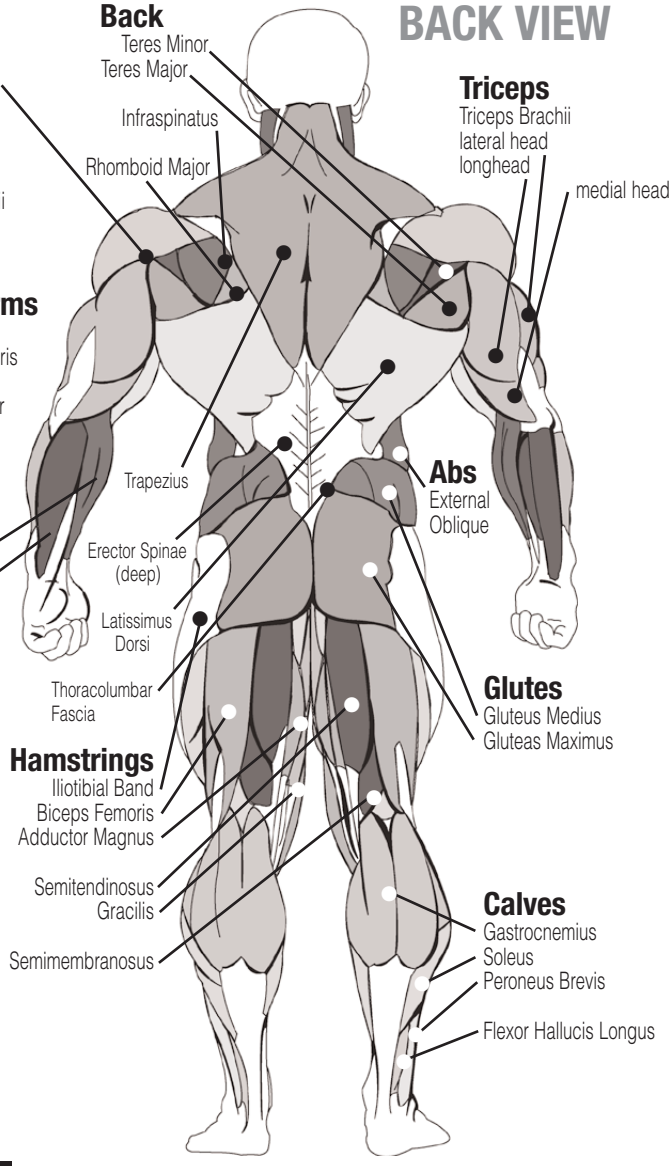

FITNESS GOALS*



SHORT-TERM GOALS

Date Set _____ **Date Accomplished** _____

Goal _____

_____

_____

_____

Reward** _____

Date Set _____ **Date Accomplished** _____

Goal _____

_____

_____

_____

Reward** _____

Date Set _____ **Date Accomplished** _____

Goal _____

_____

_____

_____

Reward** _____

LONG-TERM GOALS

Goal _____

_____

_____

_____

_____

_____

Reward! _____

_____

_____

* Make several copies of this page to keep track of your goals and accomplishments.
** Don't forget to reward yourself for a job well-done!

BEGINNER'S SAMPLE WORKOUT ROUTINE

Keep track of your changes and improvements. It's a great motivational tool!*

S = Sets
R = Repetitions per set
W = Weight used

Date																		
Exercise	S	R	W	S	R	W	S	R	W	S	R	W	S	R	W	S	R	W
BENCH / CHEST PRESS																		
LAT PULLDOWN																		
SHOULDER PRESS																		
TRICEP PRESSDOWN																		
BICEP CURL																		
LEG PRESS / SQUAT																		
LEG EXTENSION																		
LEG CURL																		
CALF RAISE																		
AB CRUNCH																		
TOTALS																		

Make several copies of this page to keep track of your progress. You can print more copies of this page by going to http://www.bodysolid.com/support/docs.html



SAMPLE WORKOUT ROUTINE WHEN TRAINING FOR STRENGTH

Keep track of your changes and improvements. It's a great motivational tool!*

S = Sets
R = Repetitions per set
W = Weight used

WEIGHT TRAINING EXERCISE LOG

Date																		
Exercise	S	R	W	S	R	W	S	R	W	S	R	W	S	R	W	S	R	W
LEG PRESS / SQUAT																		
LEG EXTENSION																		
LEG CURL																		
CALF RAISE																		
BENCH / CHEST PRESS																		
INCLINE PRESS																		
INCLINE PEC FLY																		
LAT PULLDOWN																		
SEATED ROW																		
MILITARY PRESS																		
UPRIGHT ROW																		
BICEP CURL																		
TRICEP PRESSDOWN																		
TRICEP EXTENSION																		
RESISTANCE AB CRUNCH																		
RESISTANCE OBLIQUE CRUNCH																		
TOTALS																		

Make several copies of this page to keep track of your progress. You can print more copies of this page by going to http://www.bodysolid.com/support/docs.html

WEIGHT TRAINING EXERCISE LOG

INTERMEDIATE AND ADVANCED LIFTERS... Design your personal strength training program. Keep track of your changes and improvements. It's a great motivational tool!*

S = Sets
R = Repetitions per set
W = Weight used

Date																		
Exercise	S	R	W	S	R	W	S	R	W	S	R	W	S	R	W	S	R	W
TOTALS																		

Make several copies of this page to keep track of your progress. You can print more copies of this page by going to http://www.bodysolid.com/support/docs.html

STRETCHING & FLEXIBILITY



Flexibility is an important component of physical fitness and needs to be addressed in a resistance training program. The two main purposes for stretching are injury prevention and a faster rate of recovery from exercise. Stretching should be performed in both the warm up and cool down phases of a training session. A good general guideline is that each workout session should be preceded by 5 to 15 minutes of general warm up, followed by 8 to 12 minutes of stretching, and concluded with 4 to 5 minutes of post-exercise stretching.

A regular stretching program will loosen muscle tissue, allowing an increased range of motion. This helps prevent microtears at the muscle-tendon junction. Almost 90% of all injuries from muscle strain occur at the muscle-tendon junction. Repeated injury at this junction can lead to a build-up of scar tissue, which impedes range of motion and adds stress to the joints.

Begin by stretching the major muscle groups first. Move in and out of your stretches with smooth, slow, controlled motion. Hold the stretch for at least 10 seconds when you feel you have reached your muscle's maximum distance. Do not use fast, hurried or reckless motions when stretching. Fast and bouncy motions will increase the risk of injury.

The most common and most popular type of stretching is the **static stretching** technique. This form of stretching involves voluntary, complete relaxation of the muscles while they are elongated. A static stretch is a constant, steady stretch in which the end position is held for 10 to 30 seconds. This technique is popular because it is easy to learn, effective, and accompanied by minimal soreness with the least risk of injury.

Ballistic stretching involves a bouncing or bobbing movement during the stretch. The final position in the movement is not held. Ballistic stretching is unpopular because of the increased amount of delayed muscle soreness and the possibility of injury during the stretching exercise. Ballistic stretching is not recommended.

A dynamic stretch involves flexibility during sport specific movements. **Dynamic stretching** is similar to ballistic stretching in that it utilizes movement, but dynamic stretching includes movements that may be specific to a sport or movement pattern. Dynamic stretching is most common among track and field athletes, but is also used in other sports, such as basketball and volleyball. An example of dynamic stretching would be a track sprinter performing high knees with an emphasis on knee height and arm action, not on horizontal speed.

The following pages show illustrations with descriptions of static stretching for warm up and post-exercise cool down. Remember... stretch your large muscle groups first and do all stretches in a smooth, slow, controlled manner.

UPPER BACK

Cross Arm in Front of Chest

MUSCLE(S) AFFECTED: *latissimus dorsi and teres major*

1. Stand or sit with the right arm slightly flexed (15° to 30°) and adducted across the chest.
2. Grasp the upper arm just above the elbow, placing the left hand on the posterior side of the upper arm.
3. Pull the right arm across the chest (toward the left) with the left hand.
4. Hold for 10 seconds.
5. Repeat with the left arm.



Stretching the upper back

UPPER BACK

Arms Straight Up Above Head (Pillar)

MUSCLE(S) AFFECTED: *latissimus dorsi and wrist flexors*

1. Stand with arms in front of torso, fingers interlocked with palms facing each other.
2. Slowly straighten the arms above the head with palms up.
3. Continue to reach upward with hands and arms.
4. While continuing to reach upward, slowly reach slightly backward.
5. Hold for 10 seconds.



Stretching the shoulders, chest and upper back

LOWER BACK

Spinal Twist (Pretzel)

MUSCLE(S) AFFECTED: *internal oblique, external oblique and spinal erectors*

1. Sitting with legs straight and upper body nearly vertical, place right foot on left side of left knee.
2. Place back of left elbow on right side of right knee, which is now bent.
3. Place right palm on floor 12 to 16 inches behind hips.
4. Push right knee to the left with left elbow while turning shoulders and head to the right as far as possible. Try to look behind the back.
5. Hold for 10 seconds.
6. Repeat with left leg.

Stretching the low back and sides



LOWER BACK

Semi-Leg Straddle

MUSCLE(S) AFFECTED: *spinal erectors*

1. Sitting, knees flexed 30 to 50 degrees, let the legs totally relax.
2. Point the knees outward; the lateral side of the knees may or may not touch the floor.
3. Lean forward from waist and reach forward with extended arms. Hold position for 10 to 15 seconds.
4. Bending and relaxing legs decreases hamstring involvement and increases lower back stretch.



Stretching the low back from seated position



STRETCHING WARM-UP/COOL-DOWN

SIDES

Side Bend with Straight Arms

MUSCLE(S) AFFECTED: *external oblique, latissimus dorsi and serratus anterior*

1. Stand with feet 14 to 16 inches apart.
2. Interlace the fingers with palms facing each other.
3. Reach upward with straight arms.
4. Keeping arms straight, lean from waist to left side. Do not bend knees.
5. After moving as far as possible, hold for 10 seconds.
6. Repeat to the left side.

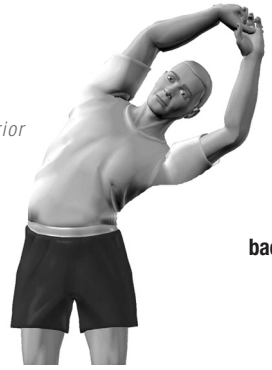

Stretching the sides, upper back and shoulders

SHOULDER

Seated Lean-Back

MUSCLE(S) AFFECTED: *deltoids and pectoralis major*

1. Sitting with legs straight and arms extended, place palms on floor about 12 inches behind hips.
2. Point fingers away (backward) from body.
3. Slide hands backward and lean backward.
4. Hold for 10 seconds.

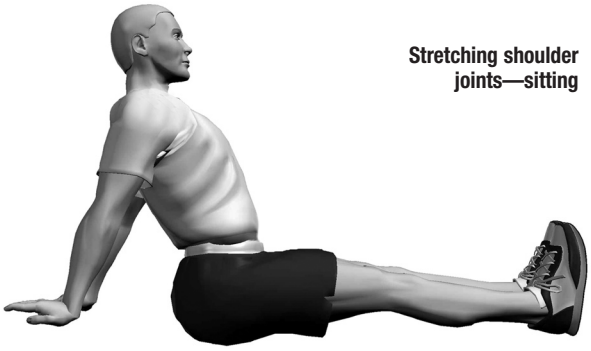

Stretching shoulder joints—sitting

CHEST

Straight Arms Behind Back

MUSCLE(S) AFFECTED: *deltoids and pectoralis major*

1. Standing, place both arms behind back.
2. Interlock fingers with palms facing each other.
3. Straighten arms fully.
4. Slowly raise the straight arms.
5. Hold for 10 to 15 seconds.
6. Keep head upright and neck relaxed.



Stretching the chest

Remember... do all stretches in a smooth, slow, controlled manner.

POSTERIOR OF THIGH

Sitting Toe Touch

MUSCLE(S) AFFECTED: *hamstrings, spinal erectors and gastrocnemius*

1. Sit with the upper body nearly vertical and legs straight.
2. Lean forward from waist and grasp toes with each hand, slightly pull toes towards the upper body, and pull chest towards leg. (If you are very stiff, try to grasp the ankles.) Hold for 10 seconds.
3. Release toes and relax foot.
4. Grasp ankles and continue to pull chest towards legs. Hold for 10 seconds.
5. Still grasping the ankles, point away from body and continue to pull chest towards legs. Hold for 10 seconds.

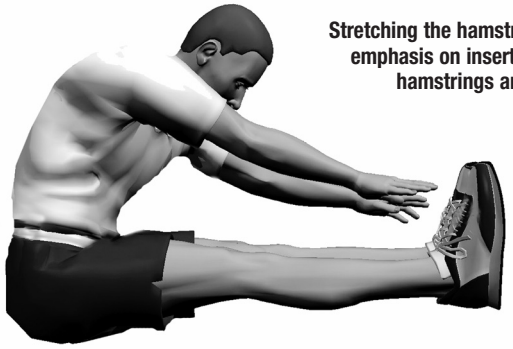

Stretching the hamstrings with emphasis on insertion of the hamstrings and calves.

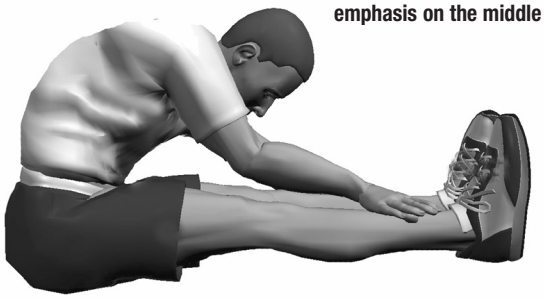

Stretching the hamstrings with emphasis on the middle portion.



Stretching the hamstrings with emphasis on the upper portion.

GROIN

Butterfly

MUSCLE(S) AFFECTED: *adductors and sartorius*

1. Sitting with the upper body nearly vertical and legs straight, flex both knees as the soles of the feet come together.
2. Pull feet toward body.
3. Place hands on feet and elbows on legs.
4. Pull torso slightly forward as elbows push legs down.
5. Hold for 10 to 15 seconds.



Stretching the groin

GROIN

Straddle (Spread Eagle)

MUSCLE(S) AFFECTED: *gastrocnemius, hamstrings, spinal erectors, adductors and sartorius*

1. Sit with the upper body nearly vertical and legs straight, and spread legs as far as possible.
2. With right hand, grasp toes of right foot and pull on toes slightly, while pulling chest toward right leg. Hold for 10 seconds.
3. Release toes and relax foot.
4. Grasp ankle and continue to pull chest toward right leg. Hold for 10 seconds.
5. Point toes away from body and continue to pull chest toward right leg. Hold for 10 seconds.
6. Repeat process with the left leg.
7. Repeat process by grasping right toes with right hand and left toes with left hand. Move the torso forward and toward the ground.



Stretching the hamstrings and groin with emphasis on insertion of the hamstrings and calves



Stretching the hamstrings and groin with emphasis on the upper portion



Stretching the groin, low back and hamstrings

POSTERIOR OF LOWER LEG

Step Stretch

MUSCLE(S) AFFECTED: *gastrocnemius and soleus; also, achilles tendon*

1. Have ready a step or board 3 to 4 inches high.
2. Place balls of both feet on the step or board, 1 inch from its edge.
3. With straight legs, lower heels as far as posible.
4. Hold for 10 to 15 seconds.
5. To stretch achilles tendon, raise heels slightly. Slightly flex the knees and then lower the heels. This stretch will be felt in the achilles tendon.
6. Hold for 10 to 15 seconds.
7. For a more intense and individualized stretch, perform this stretch with one leg at a time.



Stretching the calves standing on a step



Preparing to stretch the achilles tendon by slightly bending the knee



Stretching the achilles tendon by lowering the heel

WORKOUT



CHEST



Horizontal Grip Chest Press
(Pectorals)

1. Insert pin into weight stack at desired resistance level.
2. Adjust seat pad, back pad and press arm pivot point so that when seated the horizontal press handles bisect the Chest (pectoral) muscles.
3. Sit comfortably on the seat pad with your back flat against the back pad.
4. Grasp horizontal press handles with your arms bent and palms facing down.
5. Keeping your elbows out and below your shoulders, extend your arms forward at a smooth, moderate pace throughout the exercise movement.
6. Pause for a moment, then slowly return to the starting position. Repeat movement.
7. Exhale on exertion, inhale on return motion.



Incline Press
(Upper Pectorals)

1. Insert pin into weight stack at desired resistance level.
2. Set Press Arms to the Incline Press position and set back pad to the Incline Press position.
3. Adjust seat pad height so that when seated the horizontal press handles bisect the upper chest (pectoral) muscles.
4. Sit comfortably on the seat pad with your back flat against the back pad.
5. Grasp horizontal bench handles with your arms bent and palms facing downward.
6. Keeping your elbows out and below your shoulders, extend your arms forward at a smooth, moderate pace throughout the exercise movement.
7. Pause for a moment, then slowly return to the starting position. Repeat movement.
8. Exhale on exertion, inhale on return motion.



Cable Crossover
(Pectorals)

1. Insert pin into weight stack at desired resistance level.
2. Attach utility strap to low pulley cable.
3. Stand with your right side facing the low pulley and your feet set shoulder width apart. Grasp the handle with your right hand. Bend slightly at the waist and maintain this torso angle throughout the exercise movement.
4. Keeping your palm facing toward your body and arm slightly bent, pull strap upward and across your body in a semicircular arc until it is approximately level with your shoulder.
5. Pause for a moment, then slowly return the strap, back along the same arc, to the starting position. Repeat movement.
6. Exhale on exertion, inhale on return motion.
7. Turn around and repeat with opposite arm.



Pectoral Fly
(Pectorals)

1. Insert pin into weight stack at desired resistance level and adjust Press Arms to Storage position.
2. Adjust seat pad height so that when seated and grasping handles your upper arms are parallel with the floor.
3. Sit comfortably on the seat pad facing away from the machine and your back flat against the back pad.
4. Grasp handles with arms slightly bent and upper arms parallel with the floor.
5. Use Chest (pectoral) muscles to bring your arms forward and inward until the pec arms touch.
6. Pause for a moment, then slowly return to the starting position. Repeat movement.
7. Exhale on exertion, inhale on return motion.

BACK



Lat Pulldown
(Latissimus Dorsi)

1. Insert pin into weight stack at desired resistance level.
2. Attach Lat Bar to high pulley cable and adjust press arms out of the way.
3. Adjust seat pad so your knees fit comfortably under leg hold-down rollers. Sit on seat pad facing into machine.
4. Grasp Lat Bar 3 to 6 inches wider than your shoulders, on each side.
5. Keeping your elbows back during movement, slowly pull the Bar down toward your chest until it lightly touches the upper part of your chest.
6. Pause for a moment, then slowly return to the starting position. Repeat movement.
7. Exhale on exertion, inhale on return motion.



Shrugs
(Trapezius)

1. Insert pin into weight stack at desired resistance level.
2. Attach Straight Bar to low pulley cable.
3. Stand facing the low pulley with your feet set shoulder width apart.
4. Grasp the Straight Bar and stand erect with your arms extended straight down and the Bar resting across your thighs. Allow the weight to pull your shoulders forward and downward.
5. Use Trapezius strength to "shrug" your shoulders upward and backward as far as possible.
6. Pause for a moment, then slowly return to the starting position. Repeat movement.
7. Exhale on exertion, inhale on return motion.

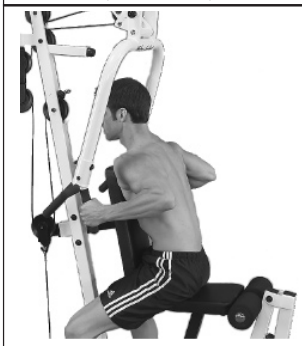

Chest Supported Mid Row
(Latissimus Dorsi)

1. Insert pin into weight stack at desired resistance level.
2. Adjust seat height so that when seated the Press Arm handles pivot to slightly below your chest area. Adjust chest pad and Press Arm handles to match arm length for full stretch.
3. Sit facing machine. Lock your legs under rollers. Keep chest flat against pad throughout movement.
4. Grasp the handles with both hands allowing the weight to gently stretch your Lats.
5. Using back strength pull the handles toward you being sure to keep your elbows close to your sides. Continue to pull the Bar until it is even with your midsection.
6. Pause for a moment, then slowly return to the starting position. Repeat movement.
7. Exhale on exertion, inhale on return motion.



Seated Row
(Latissimus Dorsi)

1. Insert pin into weight stack at desired resistance level.
2. Attach Straight Bar to low pulley cable.
3. Sit on the floor with your knees slightly bent and your feet placed firmly against the foot brace.
4. Grasp the Bar in both hands. Straighten your arms and lean towards the pulley to gently stretch your Lats.
5. Simultaneously pull the Bar toward you and sit erect, being sure to keep your elbows close to your sides. Continue to pull the Bar until it touches your midsection.
6. Pause for a moment, then slowly return to the starting position. Repeat movement.
7. Exhale on exertion, inhale on return motion.

WORKOUT



ARMS



Standing Bicep Curl
(Biceps)

1. Insert pin into weight stack at desired resistance level.
2. Attach Straight Bar to low pulley cable.
3. Take an underhand grasp on the Bar. Stand erect with your feet set at shoulder width, approximately 1 to 2 feet away from pulley. Your arms should be down at your sides with the Bar resting on your thighs.
4. Keeping your upper arms locked against the sides of your torso, use Bicep strength to curl the Bar upward and forward in a semicircular arc to a position beneath your chin.
5. Pause for a moment, then slowly return the Bar back along the same arc, to the starting position. Repeat movement.
6. Exhale on exertion, inhale on return motion.



Concentration Curl
(Biceps)

1. Insert pin into weight stack at desired resistance level.
2. Attach a short handle strap to low pulley.
3. Stand with your left side facing the machine with the low pulley in front of you and just to your left.
4. Bend forward at the hips and knees and position your right hand just above your right knee where it will remain throughout the exercise movement.
5. Grasp the handle in your left hand, palm up. Keeping your left elbow anchored between your right hand and your left knee, slowly raise the handle upward in a semicircular arc until it lightly touches your chest.
6. Pause for a moment, then slowly return along the same arc to the starting position and repeat movement.
7. Exhale on exertion, inhale on the return motion.
8. Turn around and repeat with right arm.



Triceps Press Down
(Triceps)

1. Insert pin into weight stack at desired resistance level.
2. Attach Straight Bar to high pulley cable.
3. Stand erect with your feet set at shoulder width. Take an overhand grasp of the Straight Bar with your hands set 3 to 5 inches apart.
4. Pull the Bar down and lock your upper arms against the sides of your torso where they must remain throughout the exercise movement. Lean slightly forward at the waist.
5. Moving only your forearms, use Triceps strength to press the Bar downward in a semicircular arc to a position below your waist.
6. Pause for a moment, then slowly return the Bar back along the same arc, to the starting position. Repeat movement.
7. Exhale on exertion, inhale on return motion.



Seated Triceps Extension
(Triceps)

1. Insert pin into weight stack at desired resistance level.
2. Attach Tricep Strap to middle pulley cable. Adjust seat pad to a comfortable position.
3. Sit comfortably on seat pad, facing away from the machine. Reach behind your head and secure your hands into the loops of the Tricep Strap.
4. Bend at the waist so that your torso is at an approximate 45° angle from the machine. Keep your hands behind your head and your arms bent with your elbows facing forward.
5. Keeping your upper arms motionless, use triceps strength to move the Strap forward and outward in an arcing motion until your arms are fully extended.
6. Pause for a moment, then slowly return the Strap back along the same arc, to the starting position. Repeat movement.
7. Exhale on exertion, inhale on return motion.

LEGS



Leg Abduction
(Outer Thighs)

1. Insert pin into weight stack at desired resistance level.
2. Attach Utility Strap to left ankle and low pulley cable. Stand 1 to 2 feet away from the pulley with your right side toward the machine.
3. Keeping your legs straight and your body balanced, allow the weight to pull your leg across your body and toward the machine. Be sure to keep hands away from all moving parts.
4. Using Outer Thigh strength, slowly pull your left leg across and away from your body as far as comfortably possible.
5. Pause for a moment, then slowly return along the same arc, to the starting position. Repeat movement.
6. Exhale on exertion, inhale on return motion.
7. Turn around and repeat with opposite leg.



Leg Adduction
(Inner Thighs)

1. Insert pin into weight stack at desired resistance level.
2. Attach Utility Strap to right ankle and low pulley cable. Stand 1 to 2 feet away from the pulley with your right side toward machine.
3. Keeping your legs straight and your body balanced, allow the weight to pull your leg away from your body and toward the machine. Be sure to keep hands away from all moving parts.
4. Using Inner Thigh strength, slowly pull your right leg across your body as far as comfortably possible.
5. Pause for a moment, then slowly return along the same arc, to the starting position. Repeat movement.
6. Exhale on exertion, inhale on return motion.
7. Turn around and repeat with opposite leg.



Leg Extension
(Quadriceps)

1. Insert pin into weight stack at desired resistance level.
2. Adjust seat pad, back pad and each set of rollers so that your knee joints line up with the pivot point and your ankles fit comfortably under the leg pads.
3. Using Quadricep strength, extend your feet outward and upward until your legs are extended.
4. Pause for a moment, then slowly return your feet back along the same arc, to the starting position. Repeat movement.
5. Exhale on exertion, inhale on return motion.



Standing Leg Curl
(Hamstrings)

1. Insert pin into weight stack at desired resistance level.
2. Stand facing machine and hook your left heel under the bottom leg pad with left knee positioned slightly below the top roller pad. Grasp bench handles for stability.
3. Use hamstring strength to pull and curl your left foot upward, bending your knee as much as possible.
4. Pause for a moment, then slowly return your foot back along the same arc, to the starting position. Repeat movement.
5. Exhale on exertion, inhale on return motion.
6. Change sides and repeat with opposite leg.

WORKOUT

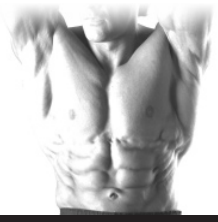

SHOULDERS



Shoulder Press
(Deltoids)

1. Insert pin into weight stack at desired resistance level.
2. Set Press Arms to the Shoulder Press position and set back pad to the Shoulder Press position.
3. Adjust seat pad height so that when seated the horizontal press handles bisect the shoulder (deltoid) muscles.
4. Sit comfortably on the seat pad with your back flat against the back pad.
5. Grasp horizontal bench handles with your arms bent and palms facing downward.
6. Keeping your elbows out, extend your arms forward at a smooth, moderate pace throughout the exercise movement.
7. Pause for a moment, then slowly return to the starting position. Repeat movement.
8. Exhale on exertion, inhale on return motion.

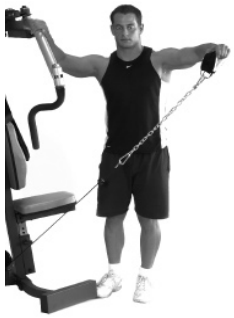

Side Deltoid Raise
(Deltoids)

1. Insert pin into weight stack at desired resistance level.
2. Attach Utility Strap or the Tricep/Ab Strap to the low pulley cable.
3. Stand with your right side facing the machine.
4. Securely grasp the Strap with your left hand and your palm facing down.
5. Using shoulder muscle strength, slowly raise the Strap upward and outward in a semicircular arc until it is in a position slightly above shoulder level.
6. Pause for a moment, then slowly return the Strap along the same arc, back to the starting position. Repeat movement.
7. Exhale on exertion, inhale on return motion.
8. Change hands, turn around and repeat with opposite arm.



Upright Row
(Deltoids & Trapezius)

1. Insert pin into weight stack at desired resistance level.
2. Attach Straight Bar to low pulley cable.
3. Stand erect, facing machine, with your feet approximately shoulder width apart and grasp the Bar with your hands set approximately 6 inches apart and your palms facing down.
4. Straighten your arms and allow the weight to pull your arms straight down.
5. Keeping your elbows above your hands at all times, slowly pull the Bar upward until the back of your hands lightly touch your chin.
6. Pause for a moment, then slowly return to the starting position. Repeat movement.
7. Exhale on exertion, inhale on return motion.

ABS

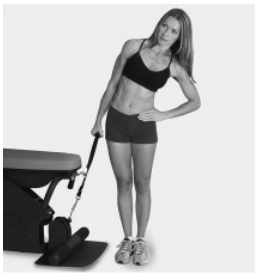

Oblique Bend
(Obliques & Abdominals)

1. Insert pin into weight stack at desired resistance level.
2. Attach Stirrup Handle (optional) to low pulley cable.
3. Take an overhand grasp of the Handle with your right hand and stand 1 to 2 feet away from the pulley with your right side facing the machine.
4. Keeping your arm, legs and hips straight, bend your torso away from the machine.
5. Pause for a moment, then slowly return to the starting position. Repeat movement.
6. Exhale on exertion, inhale on return motion.
7. Turn around and repeat with opposite hand.



Resistance Ab Crunch
(Abdominals)

1. Insert pin into weight stack at desired resistance level and adjust Press Arms to Storage position.
2. Attach Tricep / Ab Strap to middle pulley cable and adjust back pad to Chest Press position.
3. Sit on seat pad with your back resting against back pad. Grasp the Strap and place it securely over your shoulders, keeping your hands planted firmly on your upper chest throughout the entire exercise movement.
4. Using Abdominal muscle strength, slowly bend for ward at the waist as far as possible.
5. Pause for a moment, then slowly return back to the starting position. Repeat movement.
6. Exhale on exertion, inhale on return motion.

Weight Ratios

Below is a description of the different weight ratios for your selectorized gym. This chart shows actual weight being lifted according to the exercise performed. To use the chart below, count the number of selected plates, locate the plate number on the chart and move across to the correct weight ratio. The resulting value is the actual weight being lifted during the exercise.

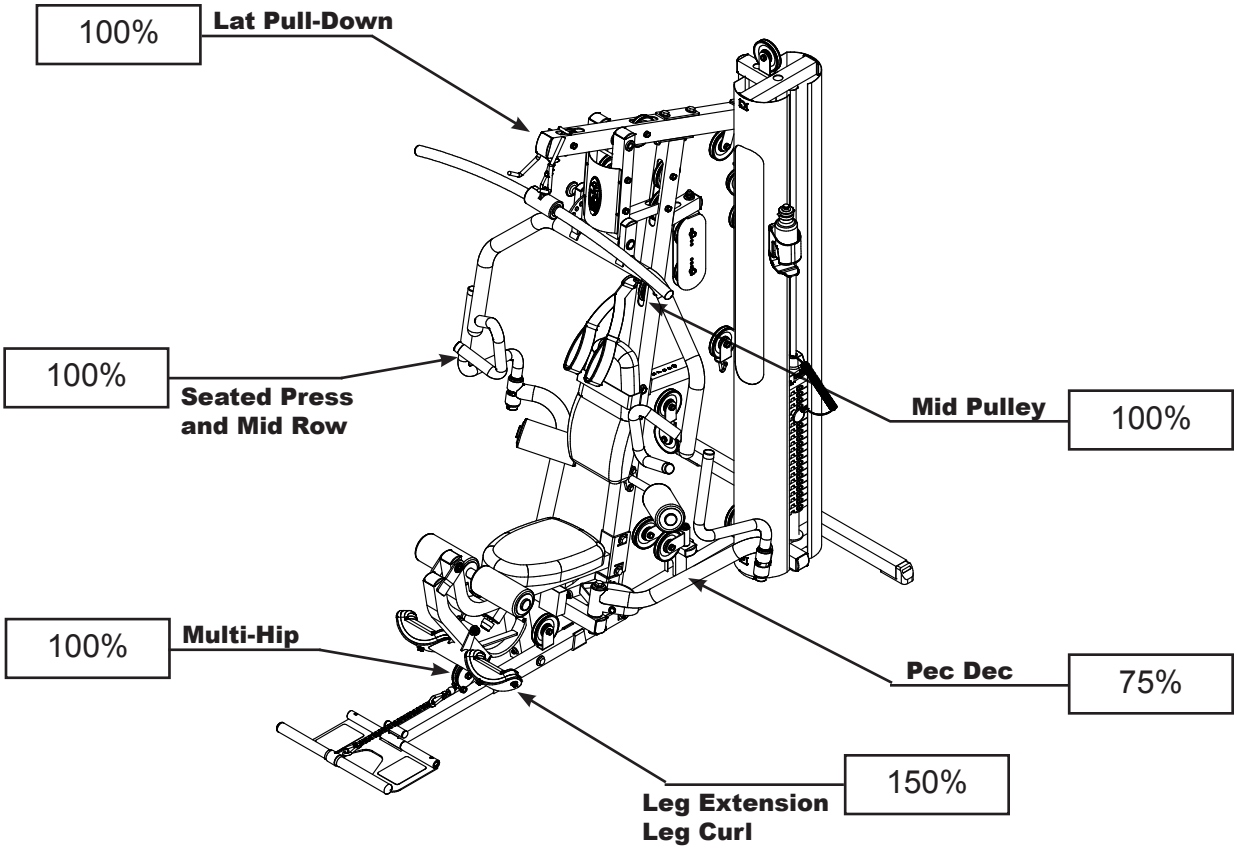

Weight Plates	75%	100%	150%
Top Plate 1	7.5 *lbs.*	10 *lbs.*	15 *lbs.*
2	15	20	30
3	22.5	30	45
4	30	40	60
5	37.5	50	75
6	45	60	90
7	52.5	70	105
8	60	80	120
9	67.5	90	135
10	75	100	150
11	82.5	110	165
12	90	120	180
13	97.5	130	195
14	105	140	210
15	112.5	150	225
16	120	160	240

This chart shows the actual weight you are lifting.

To use this chart; count the number of plates you have pinned, and move across to the correct weight ratio (depending on the exercise you are performing).

Part#	Qty	Description
A	1	MAIN BASE FRAME
B	1	REAR BASE FRAME
C	1	REAR VERTICAL FRAME
E	1	ANGLED SUPPORT FRAME
F	1	TOP FRAME
G	1	PEC DEC FRAME
H	1	LEG EXTENSION FRAME
J	1	LEFT PEC DEC ARM
K	1	LEFT PEC DEC HANDLE
L	1	RIGHT PEC DEC ARM
M	1	RIGHT PEC DEC HANDLE
N	1	SEATED PRESS ARM SUPPORT
P	1	SEATED PRESS ARM
R	1	FOOT PLATE
S	1	ADJUSTABLE CHROME FRAME
T	1	BACK PAD HOLDER
U	1	CHROME BACK PAD FRAME
V	1	BACK PAD FRAME
W	1	LEFT LEG HOLD DOWN
Y	1	LEG EXTENSION ARM
Z	1	LEG EXTENSION PAD HOLDER
ZC	1	LEG EXTENSION SEAT PAD FRAME
AA	2	GUIDE RODS
AB	1	TOP WEIGHT STACK FRAME
AC	1	PEC DEC PULLEY FRAME
AD	1	RIGHT PEC DEC PULLEY HOLDER
AE	1	LEFT PEC DEC PULLEY HOLDER
AF	1	RIGHT LEG HOLD DOWN
BA	2	WEIGHT STACK SHROUD
BB	2	SHROUD INSERT
BC	2	BACK WEIGHT STACK SHROUD
BD	1	PRESS ARM SHROUD
CA	1	DOUBLE ADJUSTABLE PULLEY HOLDER
CB	1	45° DOUBLE PULLEY HOLDER
CC	1	90° DOUBLE PULLEY HOLDER
CD	1	PULLEY HOLDER WITH HOOK

Part numbers are required when ordering parts.

Part#	Qty	Description		
1	1	WEIGHT STACK PIN	M10x138L	
2	1	STEEL CHAIN		
3	12	CONVEX END CAP	M50x50	
4	1	CONVEX END CAP	M50x75	
5	4	ROUND END CAP	1”	
6	8	CONVEX END CAP	M25x50	
7	2	ROUND END CAP	1” OD	
8	1	FLAT END CAP	M40x80	
9	2	FOOT CAP	M50x50	
10	2	RUBBER DONUT	M60 OD	
11	4	SNAP LINK		
12	4	METAL SPACER		
13	10	PULLEY SPACER	M20 OD x 16 ½L	
14	4	RUBBER PAD	M95x140L	
15	18	PLASTIC PULLEY	M110 OD x 22 WIDE	
16	3	PLASTIC PULLEY	M90 OD x 22 WIDE	
17	4	FOAM ROLLER	4” x 8”	
18	1	TOP PLATE	10 LB	
19	1	SELECTOR ROD	(25 SELECTOR HOLES)	
20	3	WEIGHT STACK SHIMS	M50x50	
21	6	PLASTIC WASHER	M75OD 26ID	
23	2	RUBBER STOPPER	M28 ½ L (⅜” BOLT)	*- PREINSTALLED*
24	2	SHAFT COLLAR		
25	20/25	WEIGHT PLATE		
26	3	T-SHAPED POP-PIN	3” L	*- PREINSTALLED*
27	14	ALLEN SCREW	M8x8 *- PREINSTALLED*	FULL THREAD
28	2	BEARING	M42OD 20ID	
29	2	STEEL BUSHING	M42OD 25ID 15L	
30	8	OILITE BUSHING	M45OD 25ID 15L	
32	4	OILITE BUSHING	M26OD 16ID 10 ½ L	
33	4	OILITE BUSHING	¾” OD ½” ID ⅜” L	*- PREINSTALLED*
34	4	CHROME ROUND END CAP	M38 OD 26ID 19L	*- PREINSTALLED*
35	2	CHROME COLLAR	M36.3 OD 26 ½ ID 15L	*- PREINSTALLED*
36	1	JAM NUT	½”	
37	1	SELECTOR ROD TOP BOLT	½” x 2”	FULL THREAD
38	1	HEX HEAD BOLT	⅜” x ⅞”	FULL THREAD
39	1	SPRING LOCK WASHER	½”	
40	1	HEX HEAD BOLT	M12x125	PARTIAL THREAD
41	2	HEX HEAD BOLT	M12x105	PARTIAL THREAD
42	1	HEX HEAD BOLT	M12x95	PARTIAL THREAD
43	12	HEX HEAD BOLT	M12x80	PARTIAL THREAD
44	4	HEX HEAD BOLT	M10x20	FULL THREAD
45	2	HEX HEAD BOLT	M12x20	FULL THREAD
46	2	HEX HEAD BOLT	M10x185	PARTIAL THREAD
47	1	HEX HEAD BOLT	M10x75	PARTIAL THREAD
48	6	HEX HEAD BOLT	M10x65	PARTIAL THREAD
49	14	HEX HEAD BOLT	M10x45	PARTIAL THREAD
50	2	HEX HEAD BOLT	M10x25	FULL THREAD
51	4	HEX HEAD BOLT	5⁄16” x 1 ¾”	PARTIAL THREAD
52	1	HEX HEAD BOLT	M12x90	PARTIAL THREAD

Part numbers are required when ordering parts.

Hardware List

Part#	Qty	Description			
53	2	HEX HEAD BOLT	M10x80		PARTIAL THREAD
54	4	JAM NUT	⅜"		*- PREINSTALLED*
55	16	NYLON LOCK NUT	M12		
56	30	NYLON LOCK NUT	M10		*- 2 PREINSTALLED*
57	38	WASHER	M12 x Ø34		*- 2 PREINSTALLED*
58	52	WASHER	M10 x Ø27		*- 8 PREINSTALLED*
59	8	WASHER	5⁄16"		
60	8	SPRING LOCK WASHER	5⁄16"		
61	1	FLAT ALLEN HEAD	⅜" x 2"		FULL THREAD
62	7	ALLEN HEAD BOLT	M10x16	*- PREINSTALLED*	FULL THREAD
63	1	HEX HEAD BOLT	M10x70		PARTIAL THREAD
64	3	FLAT ALLEN HEAD	M8x20	*- PREINSTALLED*	FULL THREAD
65	2	ALLEN HEAD BOLT	M8x15	*- PREINSTALLED*	FULL THREAD
67	8	ALLEN SCREW	M5x5	*- PREINSTALLED*	FULL THREAD
68	4	ALLEN HEAD BOLT	M4x10	*- PREINSTALLED*	FULL THREAD
69	1	SPRING WASHER	M12		
73	1	SHAFT	M20 OD x 180L		*- PREINSTALLED*
74	1	SHAFT	1" OD x M250L		*- PREINSTALLED*
75	1	FOAM ROLLER SHAFT	1" OD x M490L		
76	1	SHAFT	18 ½" OD x M400L		*- PREINSTALLED*
77	1	SHAFT	M12 OD x 75 L		*- PREINSTALLED*
78	2	PLASTIC BUSHING	M60x50		
79	1	PLASTIC BUSHING	M60x60x60L		*- PREINSTALLED*
80	2	FOAM GRIP	M38 OD x 660L		*- PREINSTALLED*
81	2	FOAM GRIP	M34 OD x 540L		*- PREINSTALLED*
82	2	FOAM GRIP	M34 OD x 220L		*- PREINSTALLED*
83	2	FOAM GRIP	M38 OD x 560L		*- PREINSTALLED*
84	1	BALL HEAD POP PIN	M38L		*- PREINSTALLED*
85	1	BALL HEAD POP PIN	M115L		*- PREINSTALLED*
86	1	PLATE	M50x150L		
87	1	FRAME LEVELER	M50x50		
88	1	HYDRAULIC SEAT ADJUSTER			*- PREINSTALLED*
89	2	WEIGHT STACK RISERS			
90	1	CABLE END SHAFT			
91	1	ALLEN SCREW	M4x8L	*- PREINSTALLED*	FULL THREAD
92	1	PLATE	M50x170L		
94	4	HEX HEAD BOLT	5⁄16" x ¾"		FULL THREAD
100	1	ACORN CAP NUT			*- PREINSTALLED*
103	2	SCREW M4 X12L			FULL THREAD
104	2	ALLEN HEAD BOLT	M8x20		FULL THREAD
105	2	WASHER	M8 x Ø24		
106	4	ROUND END CAP			
107	1	HEX HEAD BOLT	⅜" x 1 ¾"		PARTIAL THREAD
108	1	NYLON LOCK NUT	⅜"		
109	9	WASHER	M10 x Ø19		*- 3 PREINSTALLED*
110	2	ROUND END CAP	2"		
111	1	WEIGHT STACK LANYARD			
112	1	SPACER SLEEVE	¾" x M8 L		
113	1	SPACER SLEEVE	¾" x M6 ½ L		
114	1	HOOK			
115	3	SPRING WASHER	M8		*- PREINSTALLED*

Part numbers are required when ordering parts.

Part#	Qty	Description		
116	1	HEX HEAD BOLT		M12x25 FULL THREAD
117	2	SHEET COPPER		38OD x 26ID
118	1	SPRING WASHER		⅜"
120	2	RUBBER STOP	*- PREINSTALLED*	M40L (⅜" BOLT)
121	2	WASHER	*- PREINSTALLED*	M8 x Ø18
122	2	BEARING	*- PREINSTALLED*	M32 OD x 12 ID
123	2	RETAINING RING	*- PREINSTALLED*	1 ⅜" OD x 1 ⅛" ID
125	4	WASHER		M4
126	2	NUT		M4
128	1	WEIGHT STACK NUMBERS		
129	1	RUBBER PAD		M38x38L
130	1	RUBBER PAD		M38x75L
132	1	RUBBER PAD	*- PREINSTALLED*	M38x55L
133	1	GRIP TAPE	*- PREINSTALLED*	M45x70L
135	2	RUBBER CASING	*- PREINSTALLED*	16.7 OD x 150L
136	1	BODYSOLID SEAT BAND		
140	2	POSTER CLIPS		
141	1	POSTER		
142	1	BODYSOLID TOTAL WORKOUT DVD		
145	1	TOUCH-UP PAINT (DARK GREY)		
146	1	TOUCH-UP PAINT (SILVER)		
147	2	ROUND PIN	*- PREINSTALLED*	9.3 OD x 26 ½ L
148	2	RETAINING RING	*- PREINSTALLED*	16 OD x 8 ID
150	1	G5S ALUMINUM LOGO		*- PREINSTALLED*
151	1	BODYSOLID PLATE		*- PREINSTALLED*
152	1	BODYSOLID LOGO		*- PREINSTALLED*
153	1	MAINTENANCE LABEL		*- PREINSTALLED*
154	4	POP PIN STICKER		*- PREINSTALLED*
155	1	WARNING STICKER		*- PREINSTALLED*
156	1	ADJUST CABLE HERE STICKER		*- PREINSTALLED*
157	2	PINCH POINTS STICKER		*- PREINSTALLED*
158	4	RED STICKER		*- PREINSTALLED*
159	4	YELLOW STICKER		*- PREINSTALLED*
160	1	BACK PAD FRAME STICKER		*- PREINSTALLED*
161	1	PRESS ARM STICKER		*- PREINSTALLED*
162	1	GENERAL WARNING STICKER		*- PREINSTALLED*
163	1	CABLE WARNING STICKER		*- PREINSTALLED*

Part numbers are required when ordering parts.

Pads List

Part#	Qty	Description
X	1	BACK PAD
ZA	2	LEG PAD
ZB	1	SEAT PAD

Cable List

96	1	LAT PULLDOWN CABLE		4915mm
97	1	AB CRUNCH CABLE		5185mm
98	1	PEC DEC CABLE		2020mm
99	1	SHORT CABLE		757mm

Accessories List

70	1	LAT BAR		
71	1	LOW ROW BAR		
72	1	LAT BAR PAD	*- PREINSTALLED*	65 OD x 120L
101	1	WATER BOTTLE HOLDER		
102	1	WATER BOTTLE BRACKET		
127	2	LAT BAR PAD	*- PREINSTALLED*	42 OD x 20L
131	1	WATER BOTTLE		
137	1	AB/TRICEP STRAP		
138	1	ANKLE STRAP		

Part numbers are required when ordering parts.

Hardware (To Scale)

Part# 44 M10x20 Hex Head Bolt (Full Thread) Qty. 4

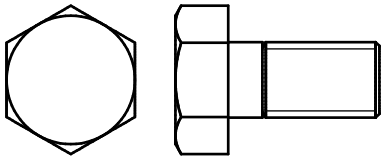

Part# 61 ⅜" x 2" Flat Allen Head Bolt (Full Thread) Qty. 1

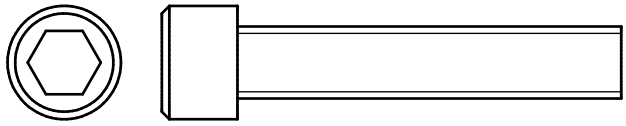

Part# 107 ⅜" x 1 ¾" Hex Head Bolt (Partial Thread) Qty. 1

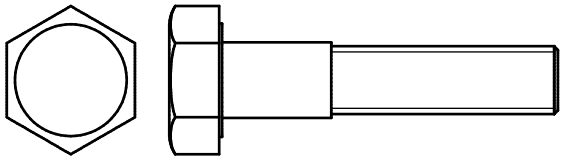

Part# 51 5⁄16" x 1 ¾" Hex Head Bolt (Partial Thread) Qty. 4

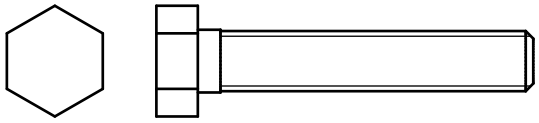

Part# 94 5⁄16" x ¾" Hex Head Bolt (Full Thread) Qty. 4

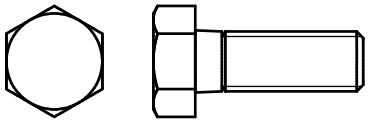

Part# 103 M4x12 Screw (Full Thread) Qty. 2



Part# 104 M8x20 Allen Head Bolt (Full Thread) Qty. 2

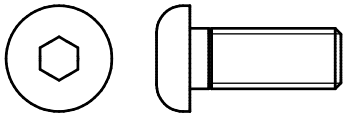

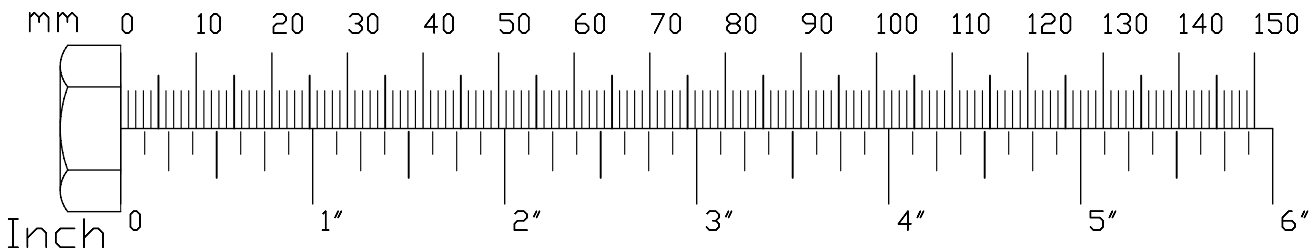

Hardware (To Scale)

Part# 40 M12x125 Hex Head Bolt (Partial Thread) Qty. 1

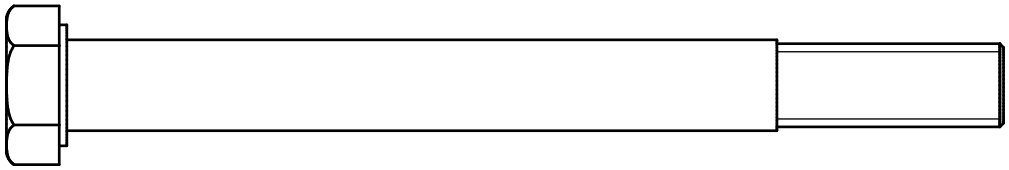

Part# 41 M12x105 Hex Head Bolt (Partial Thread) Qty. 2

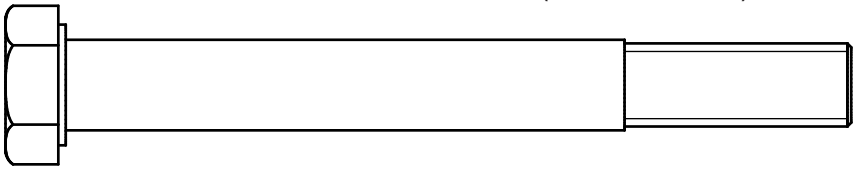

Part# 42 M12x95 Hex Head Bolt (Partial Thread) Qty. 1

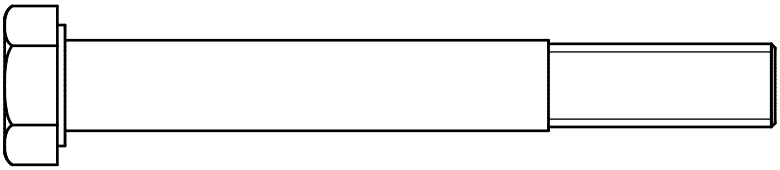

Part# 52 M12x90 Hex Head Bolt (Partial Thread) Qty. 1

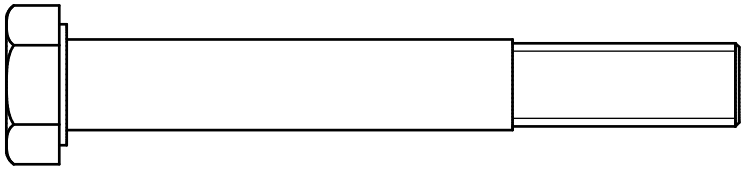

Part# 43 M12x80 Hex Head Bolt (Partial Thread) Qty. 12

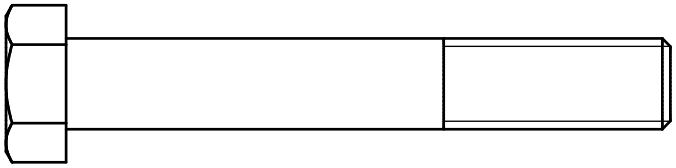

Part# 116 M12x25 Hex Head Bolt (Full Thread) Qty. 1

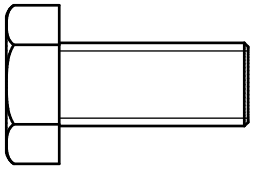

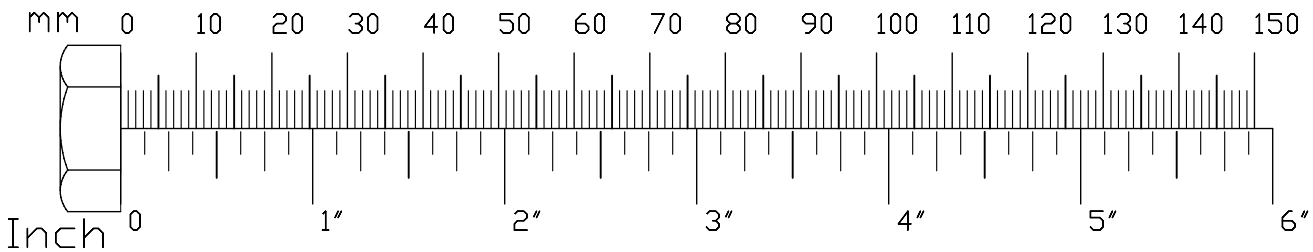

Part# 53 M10x80 Hex Head Bolt (Partial Thread) Qty. 2

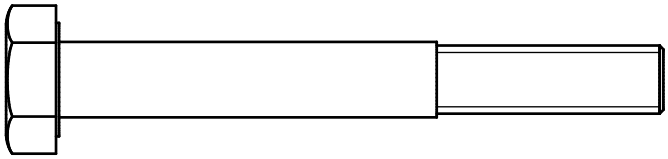

Part# 63 M10x70 Hex Head Bolt (Partial Thread) Qty. 1

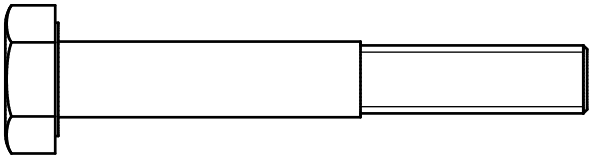

Part# 48 M10x65 Hex Head Bolt (Partial Thread) Qty. 6

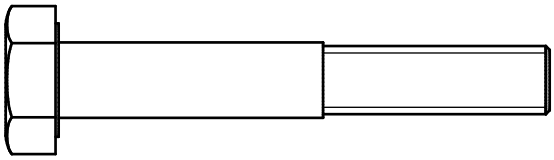

Part# 49 M10x45 Hex Head Bolt (Partial Thread) Qty. 14

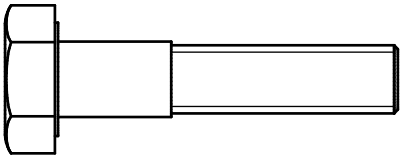

Part# 38 ⅜" x ⅞" Hex Head Bolt (Full Thread) Qty. 1

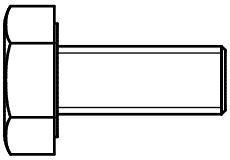

Part# 50 M10x25 Hex Head Bolt (Partial Thread) Qty. 2

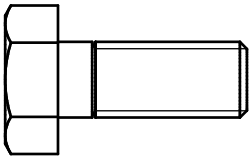

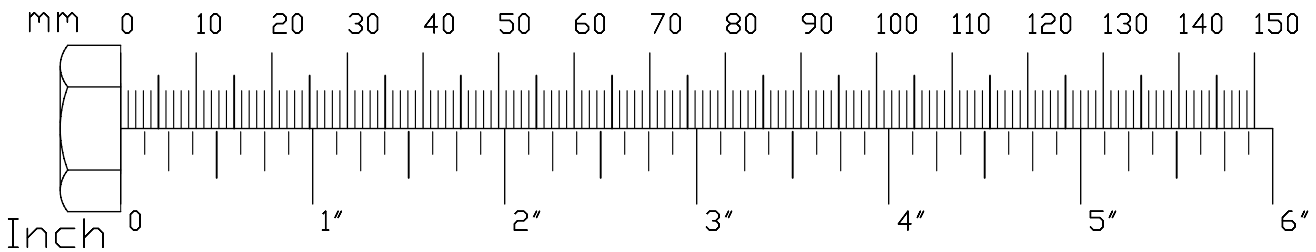

Hardware (To Scale)

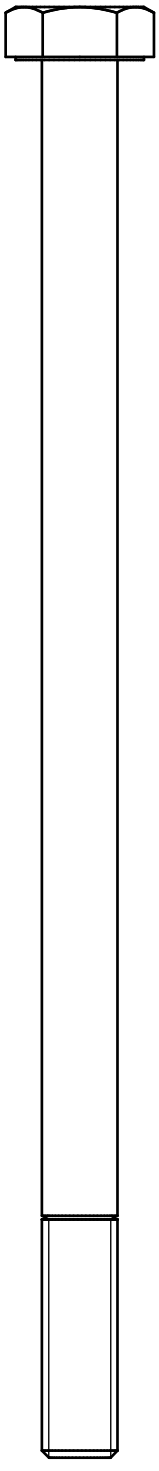

Part# 46 M10x185 Hex Head Bolt (Partial Thread) Qty. 2

Part# 57 M12 Washer Qty. 36

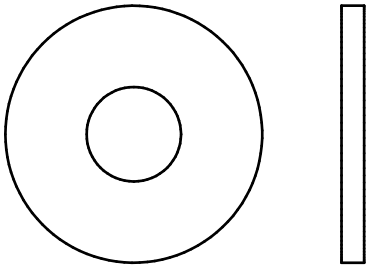

Part# 69 M12 Spring Washer Qty. 1

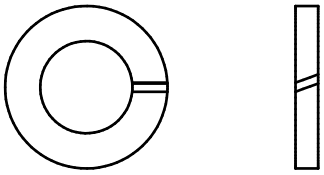

Part# 58 M10 Washer Qty. 44

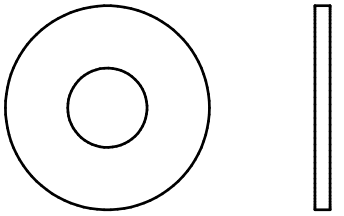

Part# 109 M10 Washer Qty. 6

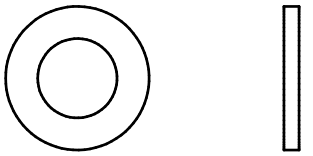

Part# 105 M8 Washer Qty. 2

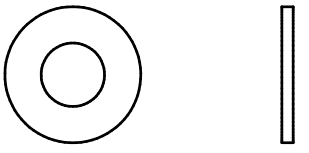

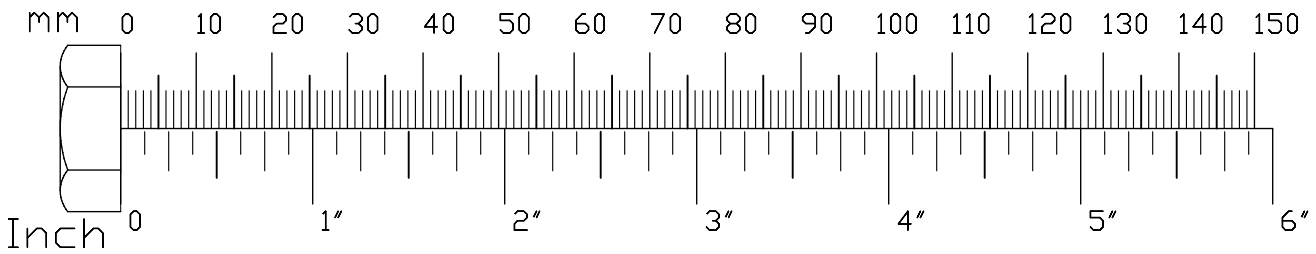

Hardware (To Scale)

Part# 59 5⁄16" Washer Qty. 8

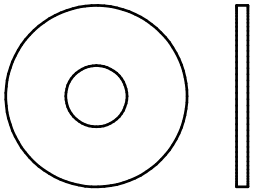

Part# 60 5⁄16" Spring Washer Qty. 8

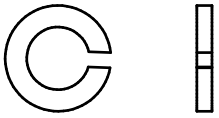

Part# 125 M4 Washer Qty. 4



Part# 55 M12 Nylon Lock Nut Qty. 16

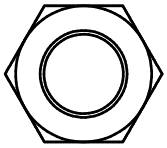

Part# 56 M10 Nylon Lock Nut Qty. 28

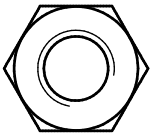

Part# 108 3⁄8" Nylon Lock Nut Qty. 1

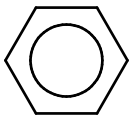

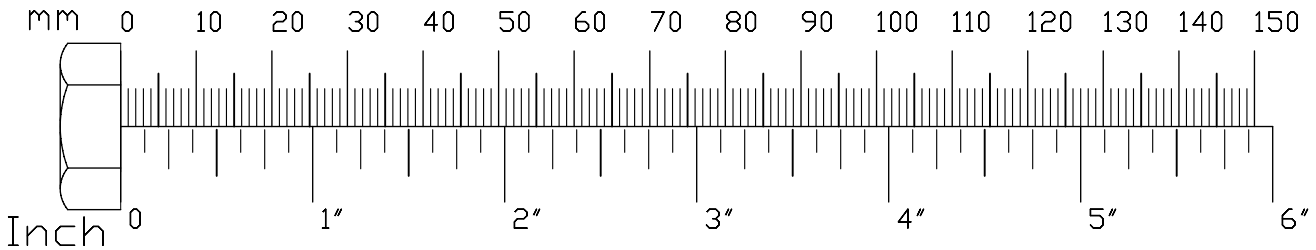

EXPLODED VIEW DIAGRAM G5S

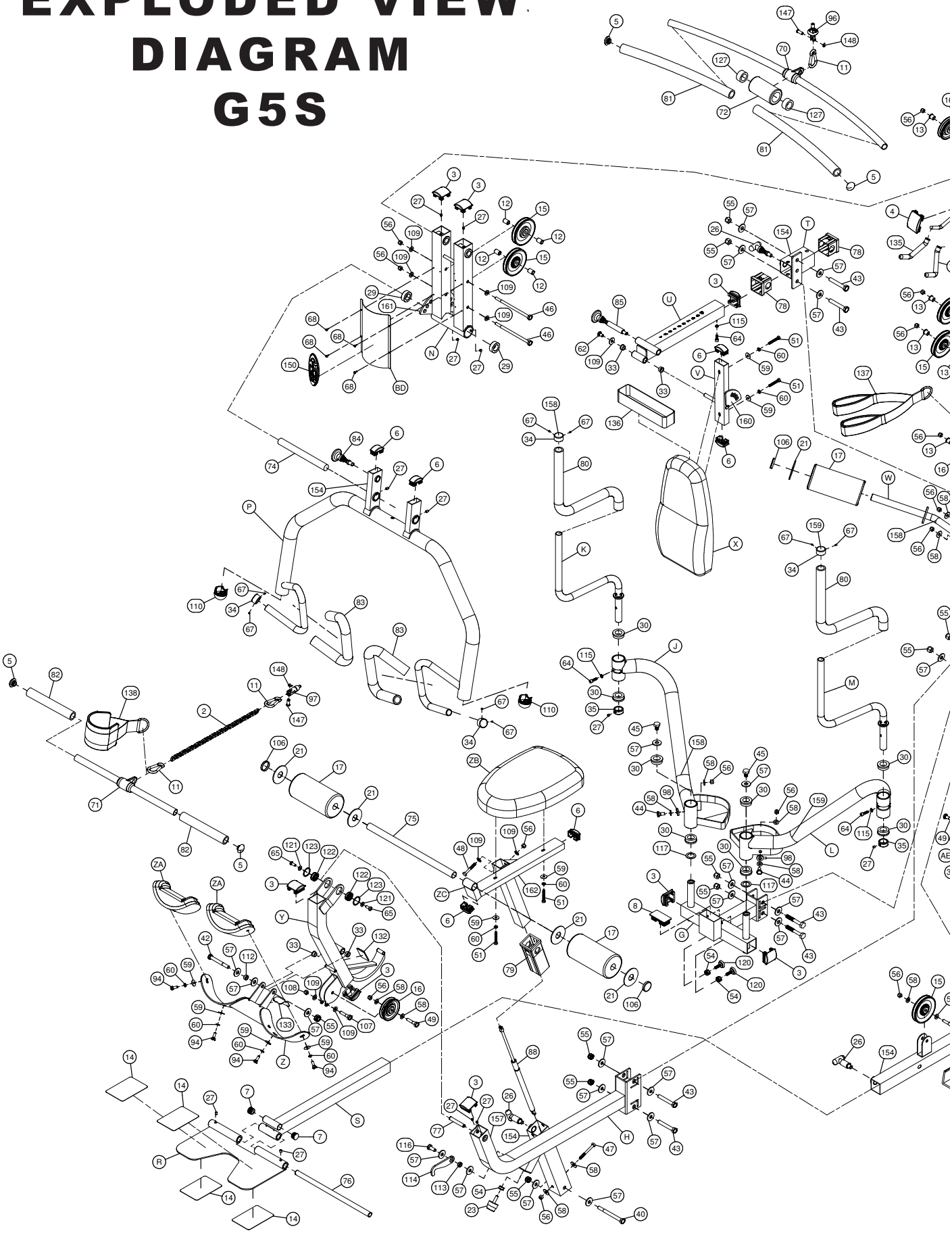

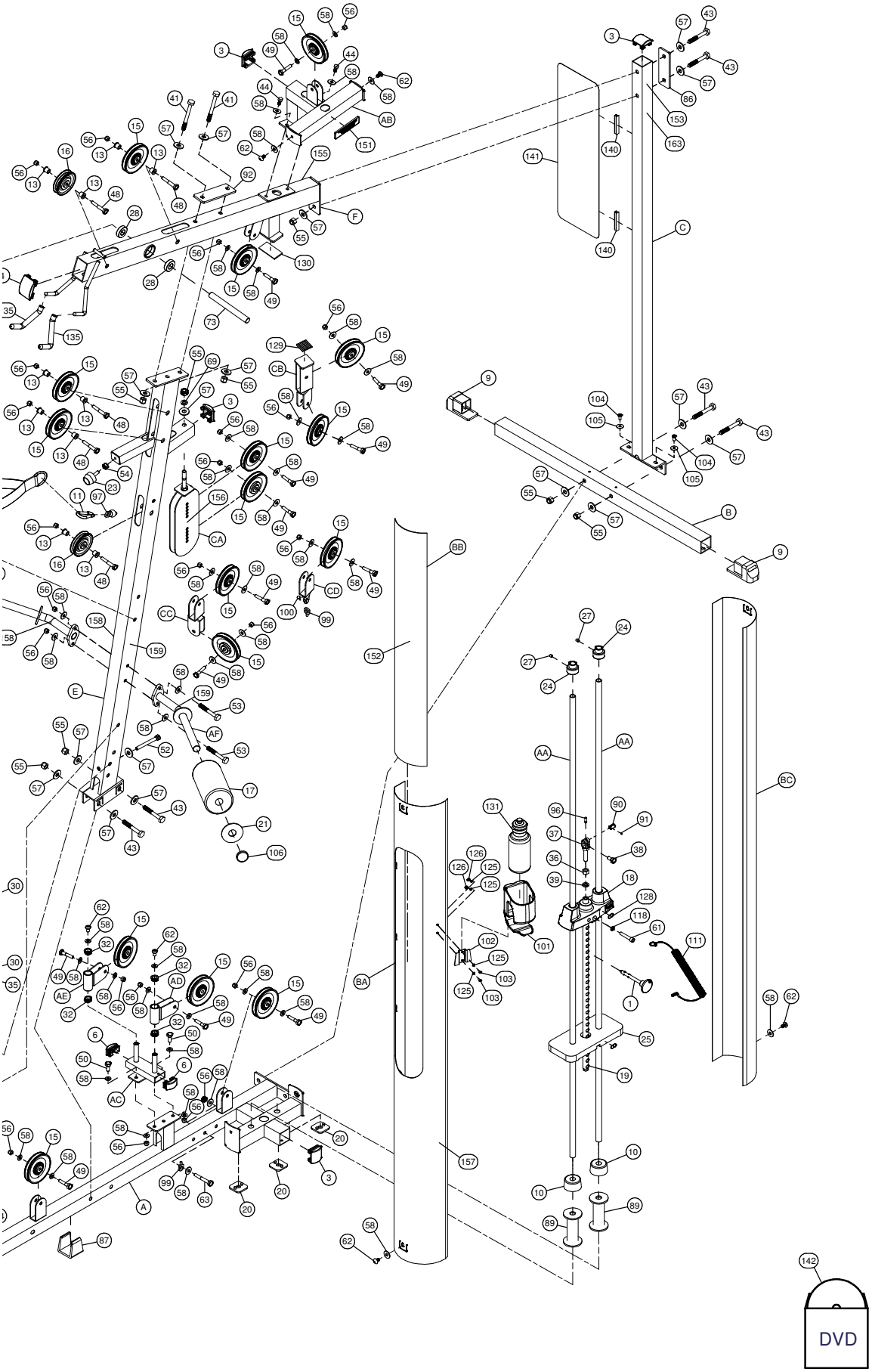
DVD

Body-Solid®
Built for Life

1900 S. Des Plaines Ave.
Forest Park, Il 60130
1 (800) 556-3113
Hours: M-F 8:30 - 5:00

www.bodysolid.com

© Copyright 2010. Body-Solid. All rights reserved. Body-Solid reserves the right to change design and specifications when we feel it will improve the product.
Body-Solid machines maintain several patented and patent pending features and designs. All rights reserved on all design patents and utility patents.